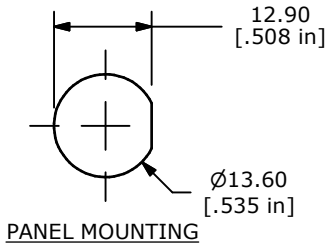

▲ CIRCUIT: SPST
OFF-(ON)
MOMENTARY (C)

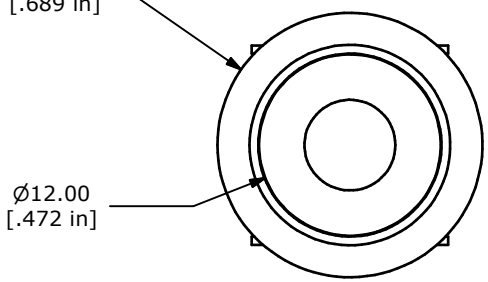

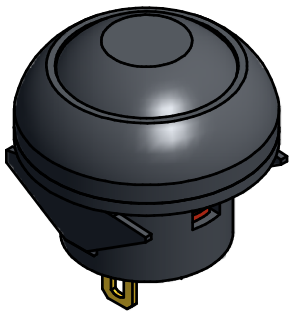

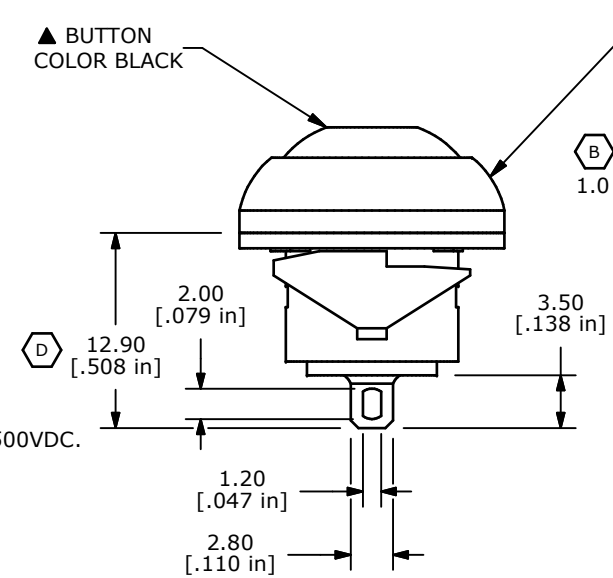

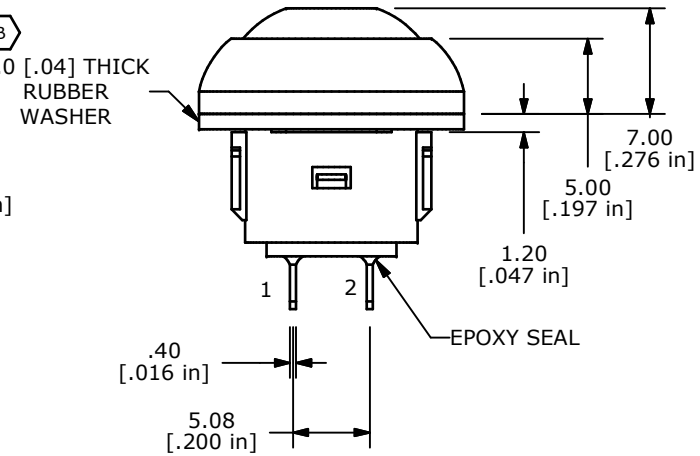

NOTE:
1. ALL DIMENSIONS IN MM [INCH]
2. GENERAL TOLERANCE: X.X=±0.4
   X.XX=±0.25
3. TERMINAL NUMBERS FOR REF ONLY
4. CIRCUIT: SPST OFF-MOMENTARY ON
5. CONTACT MATERIAL: GOLD over SILVER
▲ 6. RATING: 125mA @ 125 VAC
   100mA @ 50 VDC
▲ 7. ELECTRIC LIFE: 500,000 CYCLES AT FULL LOAD
8. CONTACT RESISTANCE: 50 milli-OHM max. (INITIAL)
9. INSULATION RESISTANCE: 1,000 MEGA-OHM min. @ 500VDC.
10. DIELECTRIC STRENGTH: 1,000 VAC rms.
(D) ▲ 11. OPERATING FORCE: 350 gf +/- 150 gf
12. OPERATING TEMPERATURE: -30°C TO +85°C.
13. CONTACT BOUNCE: 10ms MAX.
▲ 14. TRAVEL: 1.5mm
15. PANEL THICKNESS RANGE: 0.8 - 1.8 mm.
16. ▲ DENOTES CRITICAL PARAMETER.
17. 2002/95/EC (ROHS) COMPLIANT
18. HARDWARE INCLUDED:
   1. T081100 RUBBER SEAL (1)
(C) 19. SEAL RATING: IP67 AT THE FRONT PANEL (E)

REV	PCR NO	DESCRIPTION	DATE	BY
E	21593	CHANGE NOTE 19: IP67 WAS IP65	9/24/14	EBP
D	19489	CORRECT NOTE & DIM / DWG CLEAN-UP	12/01/10	BMA
C	19358	MISC. DRAWING UPDATES	10/25/10	BMA
B	17943	Dim was 1.0[0.025]	1/24/08	rc
A	17904	New-Release	12/20/07	rc

THE INFORMATION CONTAINED IN THIS DOCUMENT IS PROPRIETARY TO E-SWITCH AND IS NOT TO BE COPIED OR TRANSFERRED

E-SWITCH®

TITLE RP8100B1M1CEBLKBLKNIL

SCALE	DATE	DR	DWG	REV
2=1	12/13/2007	rc	ST081010	E