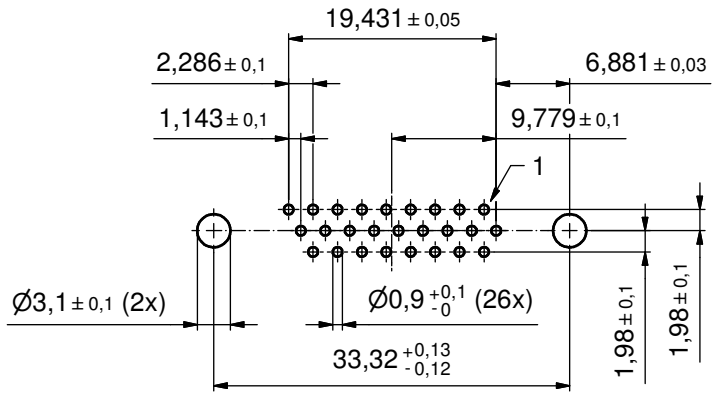

P.C.B. HOLE DRILLINGS
(P.C.B. TOP SIDE)

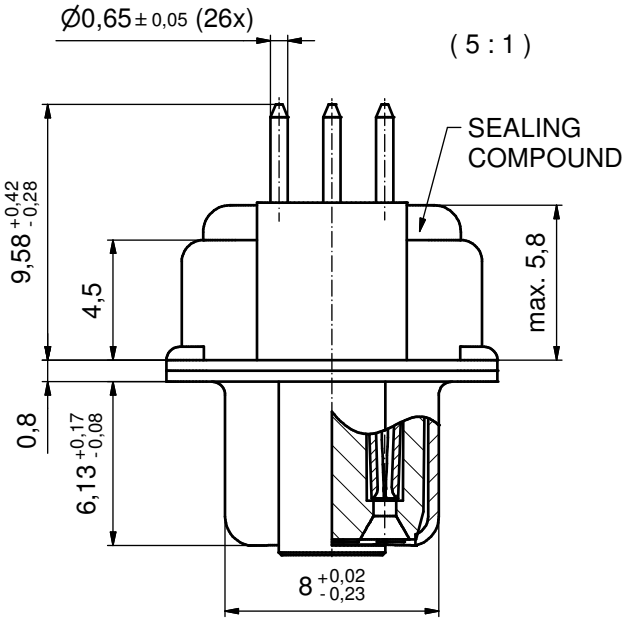

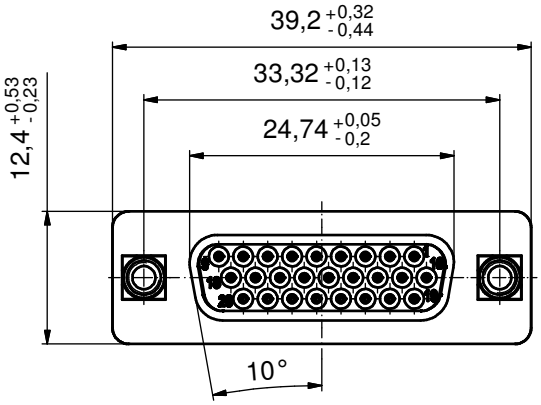

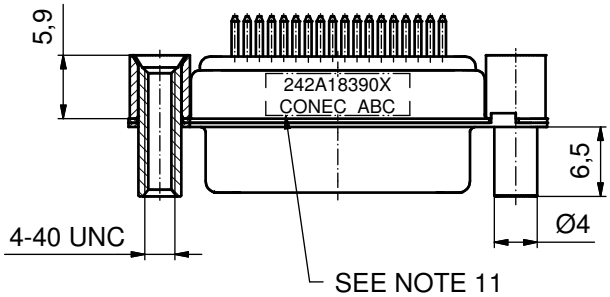

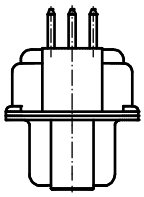

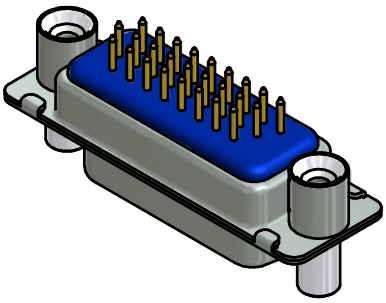

NOTES:

1. RoHS COMPLIANT
2. FOR WAVESOLDERING (SOLDER BATH TEMPERATURE 260°C FOR 5 SEC. AND SOLDER PREHEAT 100°C FOR 30 SEC.)
3. METALSHELLS: STEEL; min. 315µin TIN over 40-80µin NICKEL
4. INSULATORS: HIGH TEMPERATURE PLASTIC UL 94 V-0; BLACK
5. CONTACTS: COPPER ALLOY
   PLATING: GOLD FLASH over NICKEL
6. THREADED REAR SPACERS / FRONT THREADED LOCKS: COPPER ALLOY; min. 200µin TIN over 80µin NICKEL
7. SLEEVES: COPPER ALLOY; min. 200µin TIN over 80µin NICKEL
8. CAPACITANCE: 370pF ± 20%
9. DIELECTRIC WITHSTANDING VOLTAGE: 300 VDC
10. MAXIMUM TORQUE VALUE FOR THREAD: 6 in.LB
11. CONNECTOR IS PART MARKED: 242A18390X CONEC ABC

Directive 2002/95/EC RoHS compliant

THIS DRAWING MAY NOT BE COPIED OR REPRODUCED IN ANY WAY, AND MAY NOT BE PASSED ON TO A THIRD PARTY WITHOUT WRITTEN PERMISSION. OWNERSHIP AND COPYRIGHT OF CONEC GmbH

DO NOT ALTER CAD DRAWING BY HAND

rev.	description	date	name
a	Original		

tolerance

dim. in mm

	date	name
drawn	16.12.11	Henneboel
appd.	16.12.11	Fischer
norm		
d-old		

CONEC®

scale: 2:1 (5:1)
material: SEE NOTES

title:
D-SUB HD C FILTER FEMALE
26pos. SOLDER PIN STRAIGHT
with threaded rear spacer and front threaded lock

dwg no: 24K1A1357
DIN-A3
sh: 1

part no: 242A18390X