THIS COPY IS PROVIDED ON A RESTRICTED BASIS AND IS NOT TO BE USED IN ANY WAY DETRIMENTAL TO THE INTERESTS OF PANDUIT CORP.

PANDUIT P/N	WEIGHT
SRBPPQBRKT	2.00 LB (0.907 kg)

NOTES:
1. SEE CURRENT CATALOG FOR ADDITIONAL PART NUMBER SUFFIXES TO INDICATE COLOR AND / OR PACKAGE QUANTITY.
2. SEE CATALOG FOR COMPLETE LIST OF PARTS APPLICABLE FOR USE WITH THIS PART.
3. DIMENSIONS IN PARENTHESES ARE IN METRIC.
4. PART INCLUDES;
   2× LATCHING BRACKET
   1× STRAIN RELIEF BRACKET

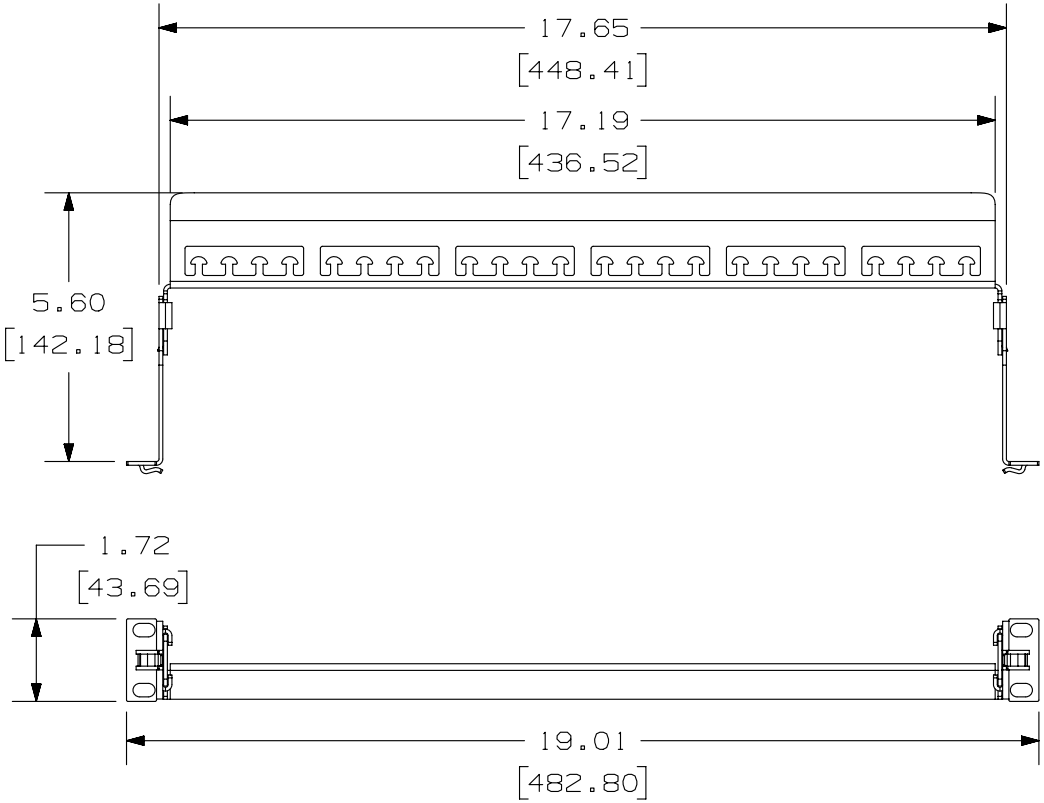

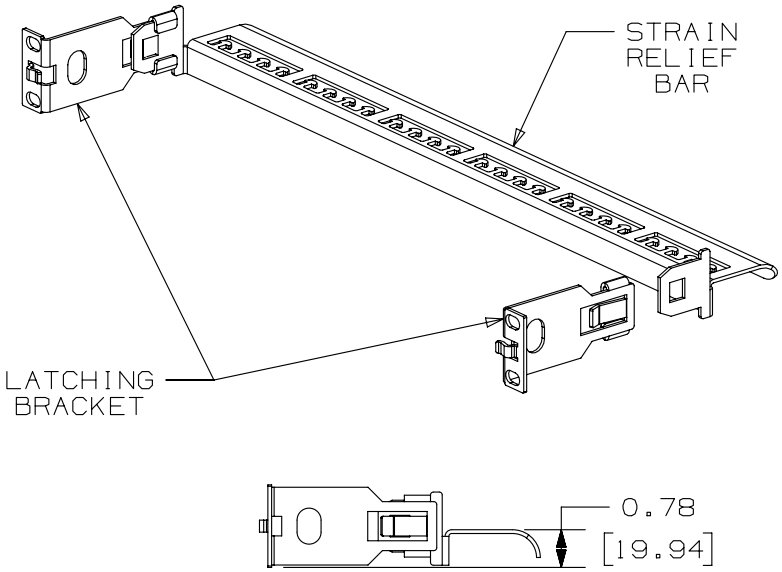

PART NUMBER	PRODUCT SPEC/PKG SPEC
SRBPPQBRKT	N/A
I.I. NUMBER	WORK INSTRUCTION
N/A	N/A

TITLE

STRAIN RELIEF BAR, PATCH PANEL MOUNTABLE WITH QUICK RELEASE BRACKET

CUSTOMER DRAWING

ITEM REVISION NAME: M00741AL/00

DATASET FILE NAME: M00741AL_DC202/00A

PANDUIT

UNLESS OTHERWISE SPECIFIED, DIMENSIONAL TOLERANCES ARE: IN [mm]

.x ± .1 [2.54] .xxx ± .015 [.381]
.xx ± .03 [.75] ANGLES ±

THIRD ANGLE PROJECTION

MATERIAL:

DRAWING NUMBER: 00741-202

DRAWN BY	DATE	CHK	SCALE		SIZE
BKA	8-22-2013	MMR	N/A	SHT 1 OF 1	A

REV	DATE	BY	CHK	APR	DESCRIPTION	ECN
R	8-22-13	BKA	MMR	LDS	RELEASED FOR DISTRIBUTION	00741-202

D10100DA/14