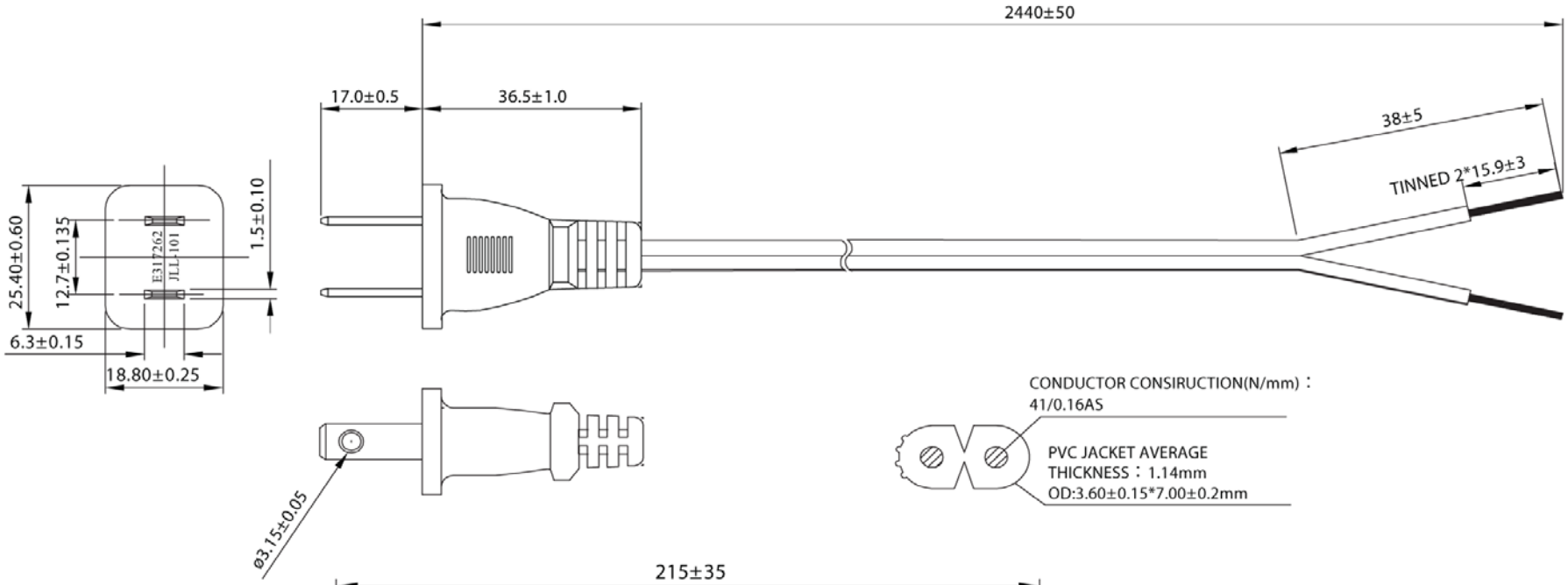

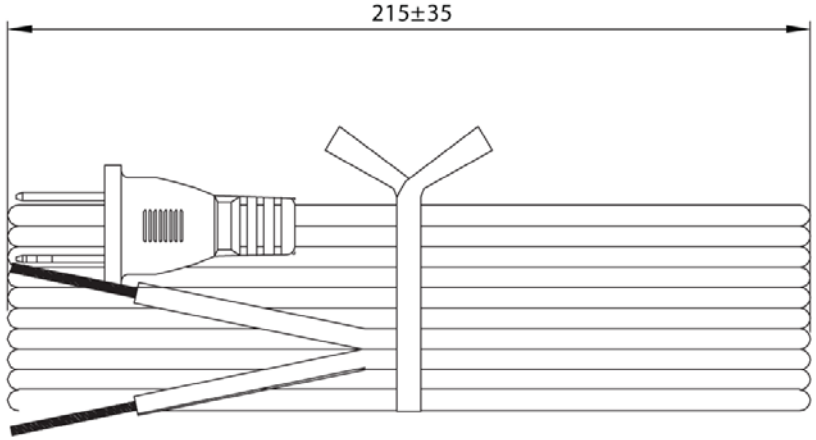

Material:

- E243711(UL) SPT-2 2 x 18AWG(0.824MM²)
  VW-1 60°C 300V
  - CSA 228191
- Jacket Color: Black

Electrical:

- 100% Open & Short Testing
- Insulation Resistance: 100MΩ (Min.)
- Voltage: 500V DC / 1 Min.

Unit: MM

Scale	1:1						Name	Item No.
TOLERANCE								AK500-OE-13-NP-8F
X.X	±0.40					Drawn	11.28.11	Chappell
X.XX	±0.25					Approved		Title: Power Cord -SPT-2/Open End, Non-Polarized, Unshielded, 60°C, 8 Feet
X.XXX	±0.15							
Angle	±3°							Drawing No. rev00
			Modification	Date	Name			Replace / Sheet

RoHS Complaint

ASSMANN WSW components