THIS DRAWING IS UNPUBLISHED. RELEASED FOR PUBLICATION AUG ,2006.
© COPYRIGHT 2009 BY TYCO ELECTRONICS CORPORATION. ALL RIGHTS RESERVED.

LOC	DIST
DW	—

REVISIONS

P	LTR	DESCRIPTION	DATE	DWN	APVD
	A2	REVISED (ECR-11-021264)	18OCT11	JC	WK

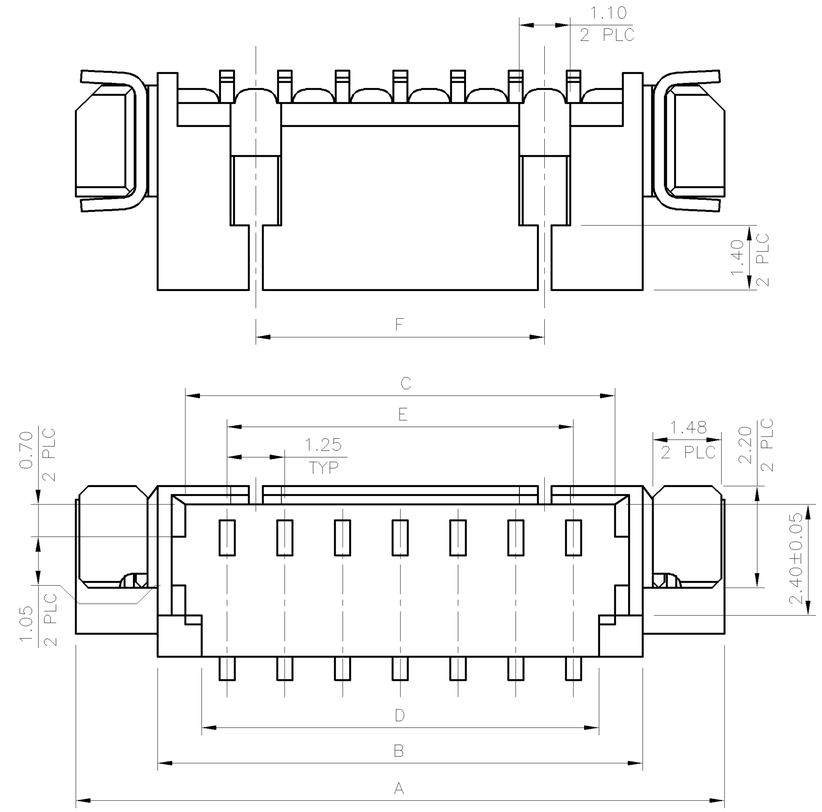

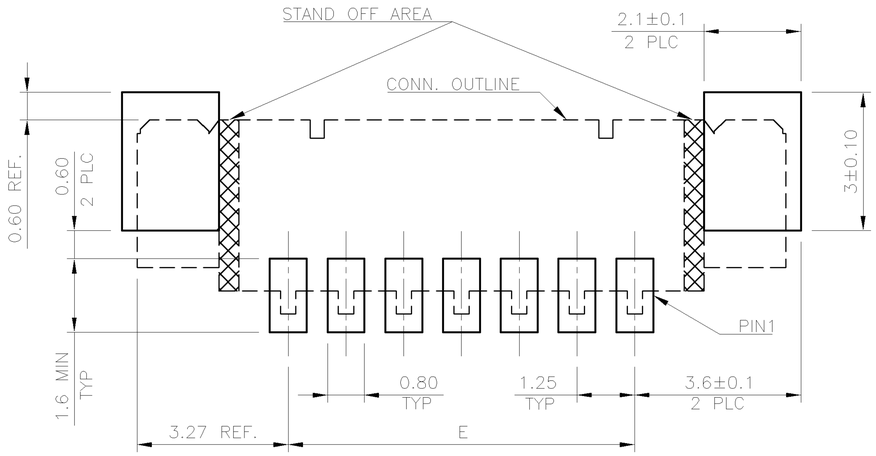

RECOMMENDED PCB LAYOUT(COMPONENT SIDE)

P.C.B THICKNESS=1.2mm(TOLERANCE:±0.05)

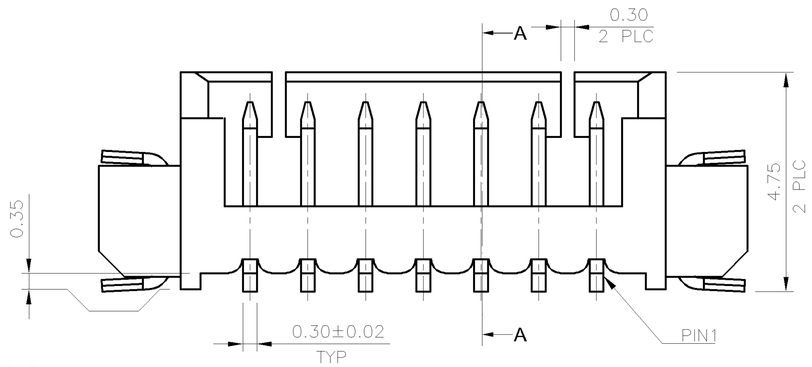

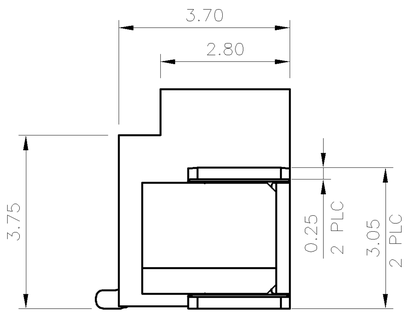

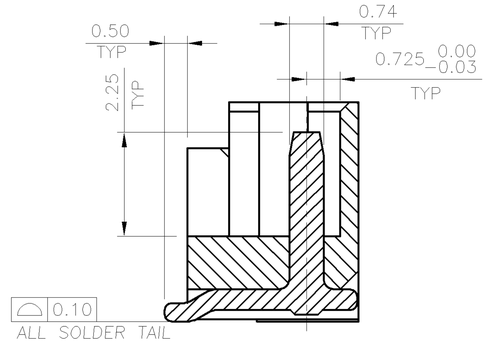

SECTION A–A

NOTE:

1. MATERIAL:
   HOUSING: THERMOPLASTIC (LCP) WITH 30% GF, UL 94V-0, NATURE COLOR.
   CONTACTS: PHOSPHOR BRONZE.
   PEGS: BRASS.
2. FINISH:
   CONTACTS: 3.048μm[120μ"] MIN. MATTE-TIN PLATING OVER
   1.27μm[50μ"] MIN. NICKEL PLATING ON ENTIRE CONTACT.
   PEGS: 3.048μm[120μ"] MIN. MATTE-TIN PLATING OVER
   1.27μm[50μ"] MIN. NICKEL PLATING ON ENTIRE CONTACT.
3. REFLOW SOLDER CAPABLE TO 260°C PER TE SPEC.109-201, CONDITION B.
4. NO TE LOGO AND DATE CODE ON THE PRODUCT.
5. LOW HALOGEN SPECIFICATION:
   CHLORINE(Cl): 900ppm MAX.
   BROMINE(Br): 900ppm MAX.
6. ALTERNATE P/N (MAERTIAL: PA9T, NON LH) IS 1734260.

TAPE & REEL	0.26 g	6.25	7.50	8.60	9.30	10.50	14.04	7	2041294-7
	0.19 g	2.50	3.75	4.85	5.55	6.75	10.29	4	2041294-4
PACKAGE	WEIGHT	F	E	D	C	B	A	NO. OF CONTACTS	PART NUMBER
		DIMENSION							

THIS DRAWING IS A CONTROLLED DOCUMENT.

DIMENSIONS: MM

TOLERANCES UNLESS OTHERWISE SPECIFIED:

0 PLC	± –
1 PLC	± 0.3
2 PLC	± 0.2
3 PLC	± 0.15
4 PLC	± –
ANGLES	± 3°

MATERIAL: SEE NOTE

FINISH: SEE NOTE

DWN J. CHEN 29JUL2010
CHK S. CHIEN 29JUL2010
APVD W. KODAMA 29JUL2010

PRODUCT SPEC: 108-57499

APPLICATION SPEC: —

WEIGHT: SEE TABLE

CUSTOMER DRAWING

TE Connectivity

NAME: WIRE TO BOARD MALE HEADER, 1.25MM PITCH, SMT STRAIGHT TYPE

SIZE	CAGE CODE	DRAWING NO	RESTRICTED TO
A3	00779	C-2041294	—

SCALE: — SHEET 1 OF 3 REV A2

THIS DRAWING IS UNPUBLISHED. RELEASED FOR PUBLICATION AUG ,2006.
© COPYRIGHT 2009 BY TYCO ELECTRONICS CORPORATION. ALL RIGHTS RESERVED.

LOC	DIST
DW	—

REVISIONS

P	LTR	DESCRIPTION	DATE	DWN	APVD
		SEE SHEET 1.			

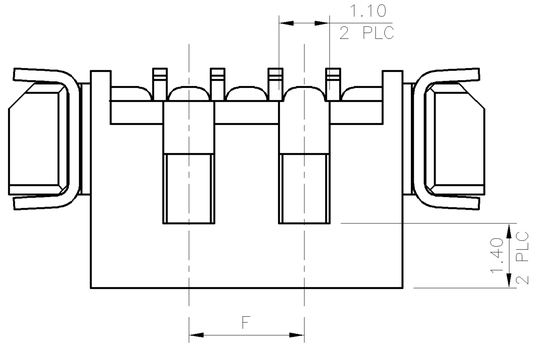

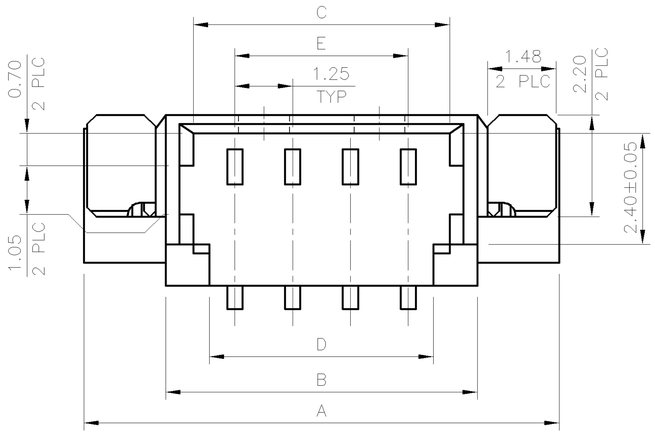

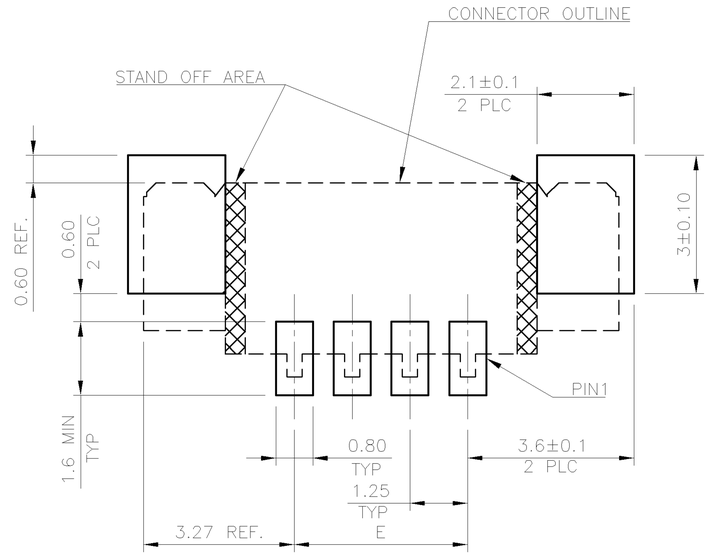

RECOMMENDED PCB LAYOUT(COMPONENT SIDE)

P.C.B THICKNESS=1.2mm(TOLERANCE:±0.05)

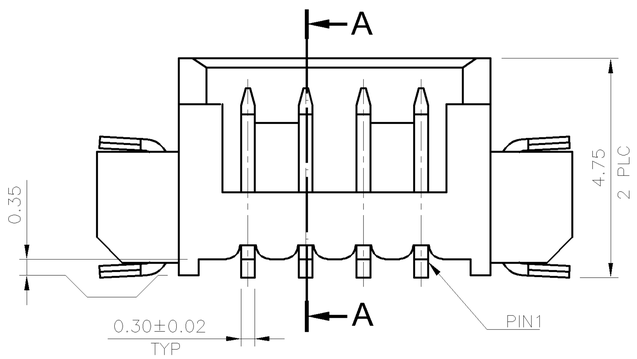

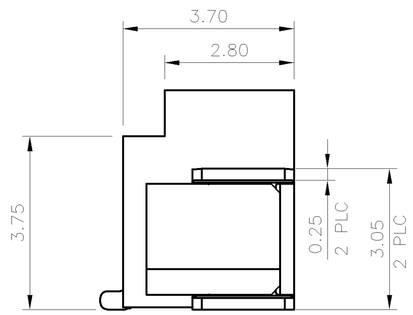

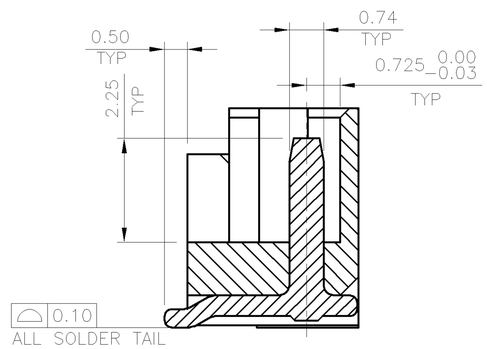

SECTION A–A

NOTE:

1. MATERIAL:
   HOUSING: THERMOPLASTIC (LCP) WITH 30% GF, UL 94V–0, NATURE COLOR.
   CONTACTS: PHOSPHOR BRONZE.
   PEGS: BRASS.
2. FINISH:
   CONTACTS: 3.048μm[120μ"] MIN. MATTE–TIN PLATING OVER,
   1.27μm[50μ"] MIN. NICKEL PLATING ON ENTIRE CONTACT.
   PEGS: 3.048μm[120μ"] MIN. MATTE–TIN PLATING OVER
   1.27μm[50μ"] MIN. NICKEL PLATING ON ENTIRE CONTACT.
3. REFLOW SOLDER CAPABLE TO 260°C PER TE SPEC.109–201, CONDITION B.
4. NO TE LOGO AND DATE CODE ON THE PRODUCT.
5. LOW HALOGEN SPECIFICATION:
   CHLORINE(Cl): 900ppm MAX.
   BROMINE(Br): 900ppm MAX.

PACKAGE	WEIGHT	DIMENSION F	DIMENSION E	DIMENSION D	DIMENSION C	DIMENSION B	DIMENSION A	NO. OF CONTACTS	PART NUMBER
TAPE & REEL	0.19 g	2.50	3.75	4.85	5.55	6.75	10.29	4	2–2041294–4

THIS DRAWING IS A CONTROLLED DOCUMENT.

DIMENSIONS: MM

TOLERANCES UNLESS OTHERWISE SPECIFIED:

0 PLC	± –
1 PLC	± 0.3
2 PLC	± 0.2
3 PLC	± 0.15
4 PLC	± –
ANGLES	± 3°

MATERIAL: SEE NOTE

FINISH: SEE NOTE

DWN
CHK
APVD
PRODUCT SPEC —
APPLICATION SPEC —
WEIGHT SEE TABLE

TE Connectivity

NAME: WIRE TO BOARD MALE HEADER, 1.25MM PITCH, SMT STRAIGHT TYPE

SIZE	CAGE CODE	DRAWING NO	RESTRICTED TO
A3	00779	C–2041294	—

CUSTOMER DRAWING | SCALE — | SHEET 2 OF 3 | REV A2

THIS DRAWING IS UNPUBLISHED. RELEASED FOR PUBLICATION AUG ,2006.
© COPYRIGHT 2009 BY TYCO ELECTRONICS CORPORATION. ALL RIGHTS RESERVED.

LOC	DIST
DW	—

REVISIONS

P	LTR	DESCRIPTION	DATE	DWN	APVD
		SEE SHEET 1.			

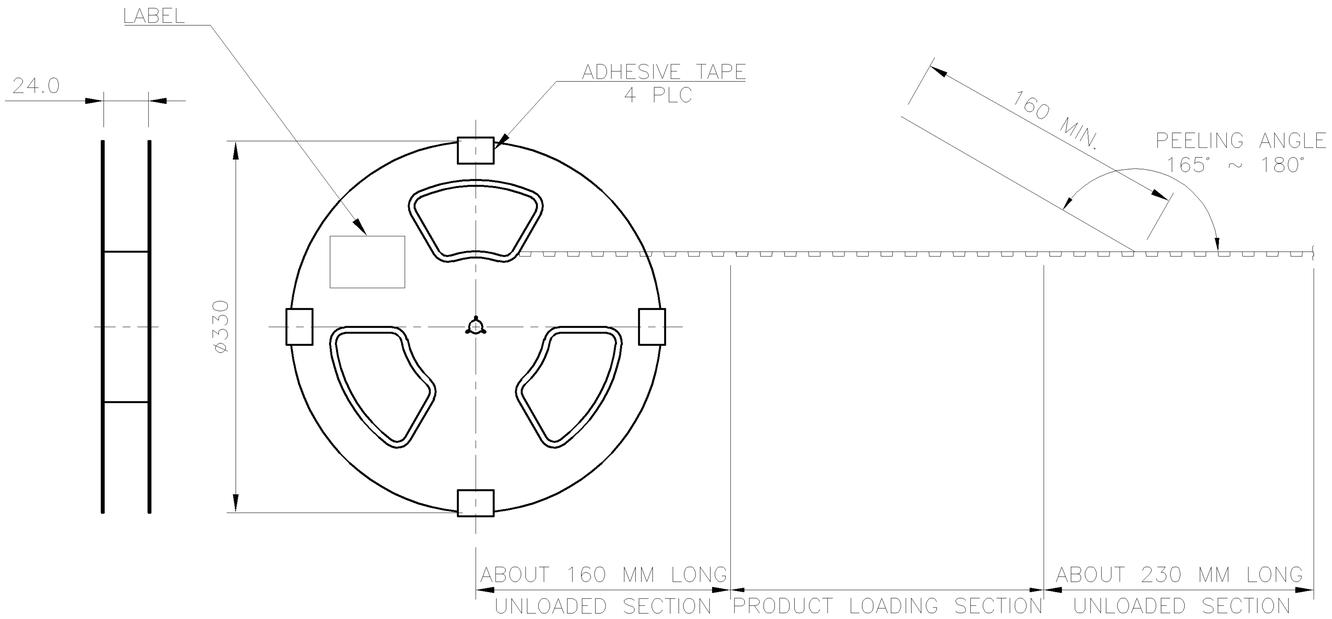

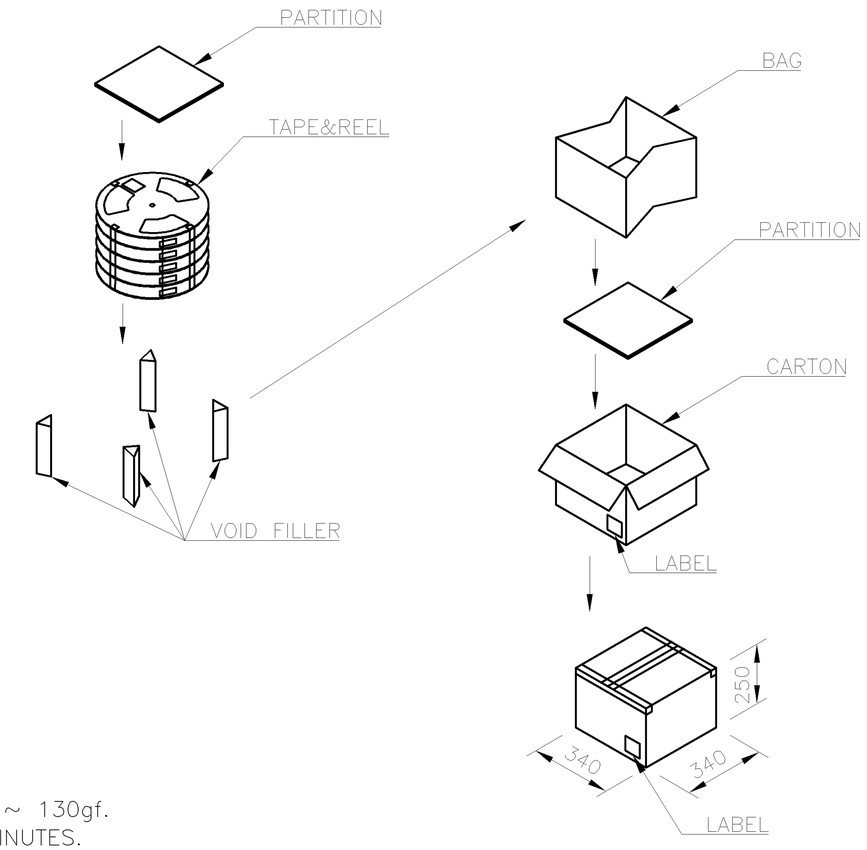

PULL OUT DIRECTION

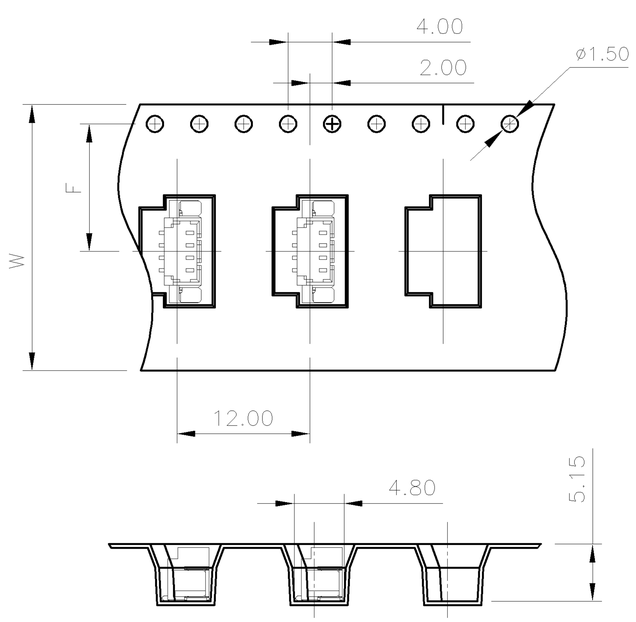

NOTE:

1. PEELING RESISTANCE: 10gf ~ 130gf.
2. PEELING SPEED: 300mm/MINUTES.

DIM F	DIM W	GROSS WEIGHT	NET WEIGHT	PCS/REEL	REELS /CARTON	QUANTITY	NO. OF CONTACTS	PART NUMBER
11.50	24.0	5.00 Kg	1.27 Kg	1000	7	7000	4	2-2041294-4
		5.64 Kg	1.82 Kg	1000	7	7000	7	2041294-7
		5.00 Kg	1.27 Kg	1000	7	7000	4	2041294-4

THIS DRAWING IS A CONTROLLED DOCUMENT.

DIMENSIONS: MM

TOLERANCES UNLESS OTHERWISE SPECIFIED:
0 PLC ± –
1 PLC ± –
2 PLC ± –
3 PLC ± –
4 PLC ± –
ANGLES ± –

MATERIAL –

FINISH –

DWN
CHK
APVD
PRODUCT SPEC —
APPLICATION SPEC —
WEIGHT —

TE Connectivity

NAME
WIRE TO BOARD MALE HEADER,
1.25MM PITCH, SMT STRAIGHT TYPE

SIZE	CAGE CODE	DRAWING NO	RESTRICTED TO
A3	00779	C-2041294	—

CUSTOMER DRAWING | SCALE — | SHEET 3 OF 3 | REV A2