REV.	DATE	ECR NO.	DESCRIPTION
NC	03/28/06	xxxx	INITIAL RELEASE
A	02/22/13	2448	MODIFY PCB MOUNTING HOLES, UPDATE DRAWING FORMAT

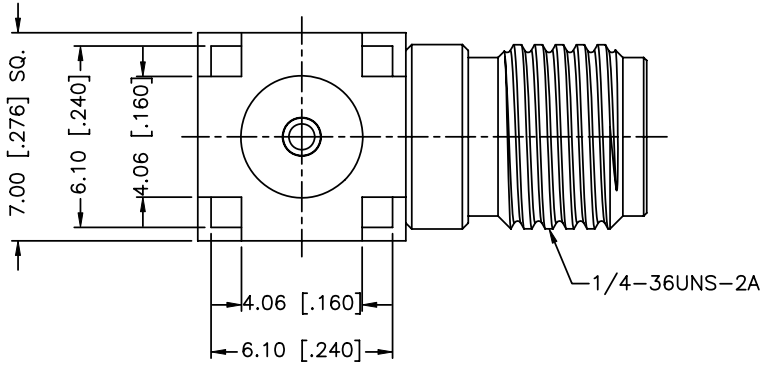

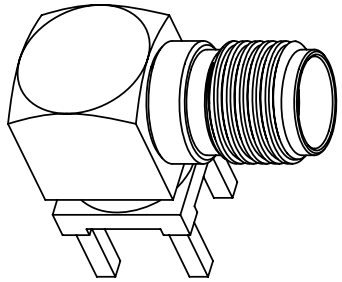

SCALE 4.000

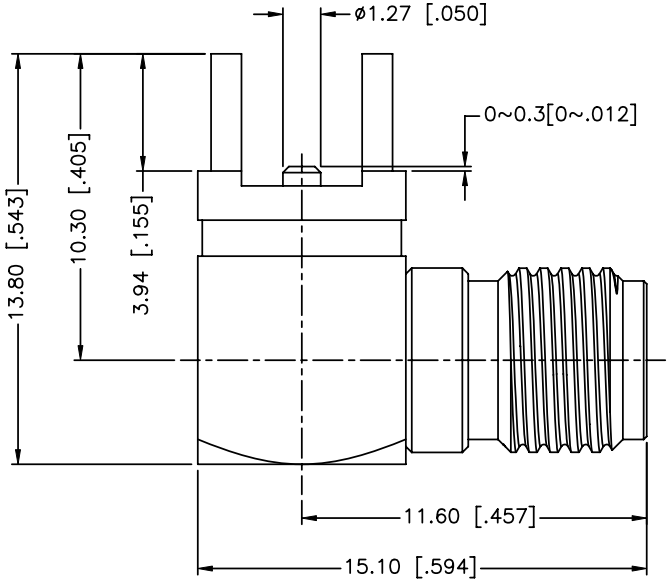

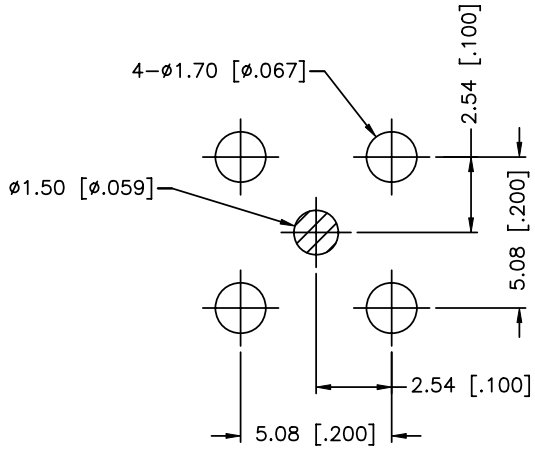

PCB MOUNTING HOLES

1. IMPEDANCE: 50 OHM
2. FREQUENCY RANGE: DC 0–18 GHz
3. VSWR: 1.5 MAX.
4. DIELECTRIC WITHSTANDING VOLTAGE: 1000 VRMS, MIN.
5. DURABILITY: 500 CYCLES MIN.
6. TEMPERATURE RANGE: –65°C TO +165°C

	DESCRIPTION	MATERIAL	FINISH	QTY
4	INSULATOR	PTFE	NATURAL	1
3	CONTACT PIN	BER. COPPER	GOLD	1
2	INSULATOR	PTFE	NATURAL	1
1	HOUSING WITH BODY	BRASS	GOLD	1

UNLESS OTHERWISE SPECIFIED DIMENSIONS ARE IN MILLIMETERS. DIMENSIONS IN [ ] ARE IN INCHES AND FOR CUSTOMER REFERANCE ONLY.
UNLESS OTHERWISE SPECIFIED TOLERANCES FOR MILLIMETERS ARE:
<0.5 ± 0.05mm
0.5 – 6mm ± 0.10mm
6 – 30mm ± 0.20mm
30 – 120mm ± 0.30mm
ANGLES ± 1°
UNLESS OTHERWISE SPECIFIED TOLERANCES FOR INCHES ARE:
<.020 ± 0.002"
.020 – .236 = ± 0.004"
.236 – 1.180 = ± 0.007"
1.180 – 4.724 = ± 0.012"
ANGLES ± 1°

DO NOT SCALE DRAWING

APPROVALS		DATE
DRAWN	R.MAO	02/22/13
CHECKED		
ISSUED		
SHEET	1 OF 1	

CAD FILE C:/CONNEX/132136–12.DWG

Amphenol Connex

PART DESCRIPTION
SMA R/A P.C. MOUNT JACK
SURFACE MOUNT CENTER CONTACT

PART NO. 132136–12

DWG. NO.	REV.	SIZE	SCALE
132136–12.DWG	A	A	NA