THIS DRAWING IS UNPUBLISHED
VERTRAULICHE UNVEROEFFENTLICHE ZEICHNUNG

RELEASE FOR PUBLIKATION ,2000
FREI FUER VEROEFFENTLICHUNG

© COPYRIGHT 2000 BY AMP INCORPORATED ALL RIGHTS RESERVED
ALLE RECHTE VORBEHALTEN

MATED WITH: / PASSEND ZU: BG2

LOC	DIST
AI	-

PROJEKT NR. EGGMA05416

REVISIONS / AENDERUNGEN

P	LTR	DESCRIPTION / BESCHREIBUNG	DATE	DWN	APVD
	B1	RELEASED AS PER ECR-06-010560	5/2/2006	RS	ST

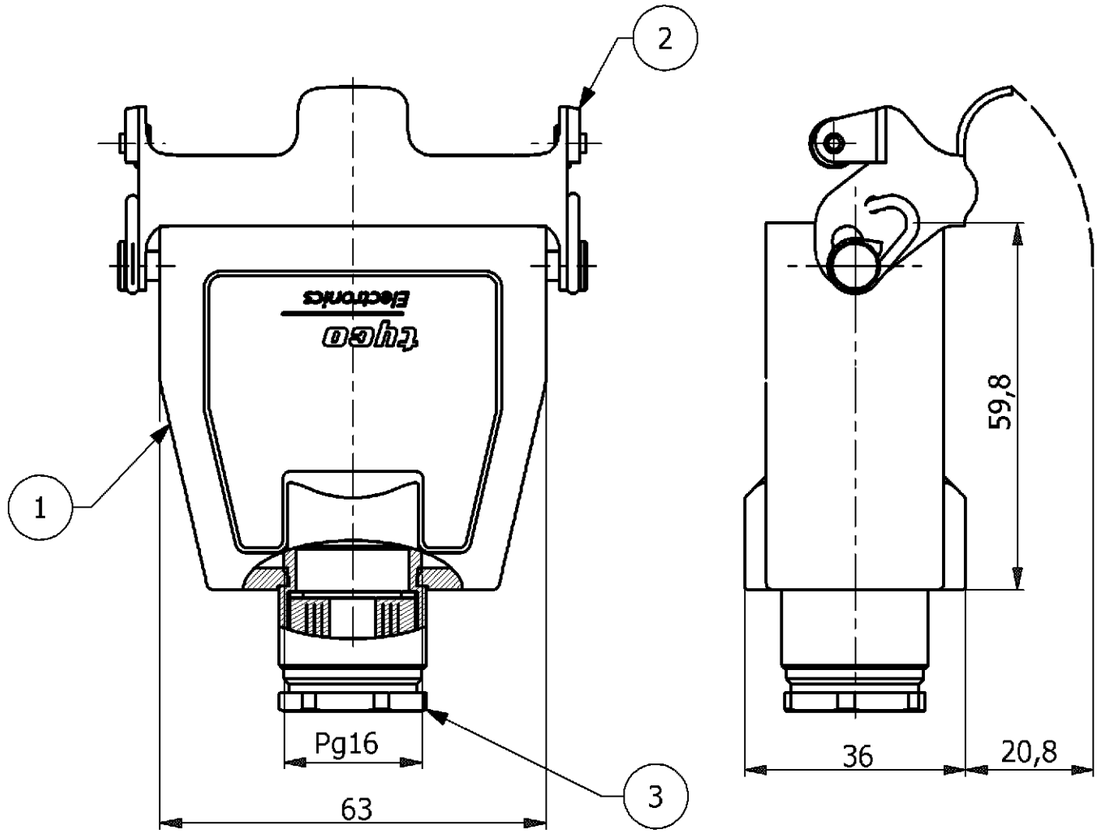

NOTES

1 PACKAGING QUANTITY: 5 PIECES PER BOX

2 MATERIAL:HOUSING:ALUMINIUM DIE CAST ALLOY

3 SURFACE:POWDER VARNISH GREY

4 VARNISH ON THE INSIDE NOT NECESSARY

(1 : 2)

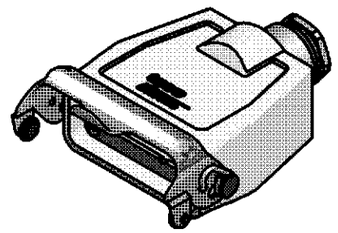

PN:0-1
Ordering Text:
HD.15.SM-KDO-LB.1.16/AM1x25

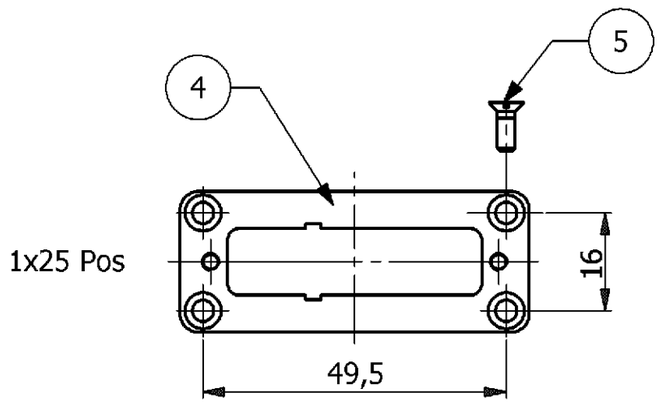

0-1	DESCRIPTION	MATERIAL	SURFACE	COLOR	ITEM NO.	REMARKS
		2	3	3		
4	Counter Sunk Screw	Steel	Zinc Plated	Blue	5	M3x8 / Loosely Packed
1	Mounting Plate	Steel	Zinc Plated	Blue	4	AM 1x25/ Loosely Packed
1	Cable Fitting Round	Brass	Nickel Plated	Blue	3	PG 16
1	Clip	Steel	Zinc Plated	Blue	2	-
1	Hood	Aluminium	-	Grey	1	-

THIS DRAWING IS A CONTROLLED DOCUMENT FOR AMP INCORPORATED. IT IS SUBJECT TO CHANGE AND THE CONTROLLING ENGINEERING ORGANIZATION SHOULD BE CONTACTED FOR THE LATEST REVISION. DIESES ZEICHNUNGSDOKUMENT WIRD DURCH AMP INCORPORATED KONTROLLIERT. AENDERUNGEN, DIE DEM TECHNISCHEN FORTSCHRITT DIENEN, SIND VORBEHALTEN. DEN JEWEILS LETZTGUELTIGEN AENDERUNGSSTAND ERFAHREN SIE AUF ANFRAGE.

DIMENSIONS: / DIMENSIONEN: mm

TOLERANCES UNLESS OTHERWISE SPECIFIED: / ALLGEMEINTOLERANZEN
n. ISO 8015 -
n. ISO 2768 - mH-E
n. DIN 16901- 140
0 PLC #
1 PLC #
2 PLC #
3 PLC #
ANGLES / WINKEL #

MATERIAL 2

FINISH / OBERFLAECHE / FARBE 3

DWN R.SRINIVAS 5/3/2006
CHK R.SRINIVAS 5/3/2006
APVD T.SCHNURPFEIL 5/3/2006
PRODUCT SPEC. / PRODUKTSPEZ. -
APPLICATION SPEC. / VERARBEITUNGSSPEZ. -
WEIGHT / GEWICHT -

tyco Electronics
Tyco / Electronics AMP GmbH
D - 53819 Neunkirchen,Germany

NAME
CABLE-TO-CABLE HOOD
HD.15.SM-KDO-LB.1.16/AM1X25

SIZE A3 | CAGE CODE 00779 | DRAWING NO / ZEICHNUNGS-NR. 1102054 | RESTRICTED TO / NUR FUER

CUSTOMER DRAWING / KUNDENZEICHNUNG | SCALE / MASSSTAB 1:1 | SHEET / BLATT 1 OF / VON 1 | REV. B1

Z:\HTS\EGGMA05416\HD_INDIA\HD-15\3.Assembly Drgs\1102054\C_1102054_B1.idw

AMP 1471-9 REV 27JUN96

This is a TRANSLATED file from Computervision, Inc,, Medusa Revision 12.2.5T