Operating Temperature Range
-25° to 70° C, relative humidity of 85% or less

Materials
1. Insulator: POM, black
2. Shell: C3604 brass, 2 µm nickel plated
3. Spring contact: C5191 phosphor bronze, 2 µm nickel plated
4. Spring fork: C3604 brass, 1 µ" gold plated

Electrical Requirements
Dielectric strength: 1 min @ 500 Vac
Insulation resistance: 100 MΩ @ 500 Vdc
Contact resistance: 50 mΩ or less

Mechanical Requirements
Insertion force: 0.4-4 kgf
Withdrawal force: 0.4-4 kgf
Life cycle: 5000 mating cycles while maintaining 0.4 kgf min. insertion force, 0.4 kgf min. withdrawal force and less than 60 mΩ contact resistance.

Environmental Requirements
Heat test: 70 °C, relative humidity 70-85% for 96 hours without deformation
Humidity test: 40 °C, relative humidity 90-100% for 96 hours without deformation
Salt spray test: 35±2 °C, relative humidity 90-95%, 5% NaCl mist for 24 hrs. Wash parts after test. Maintain mechanical requirements and a contact resistance of less than 100 mΩ.

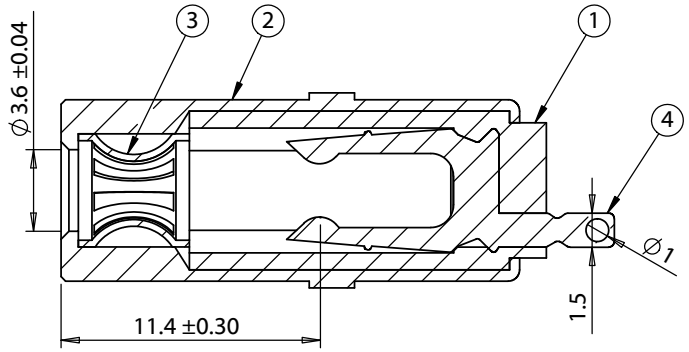

SECTION B-B
SCALE 3 : 1

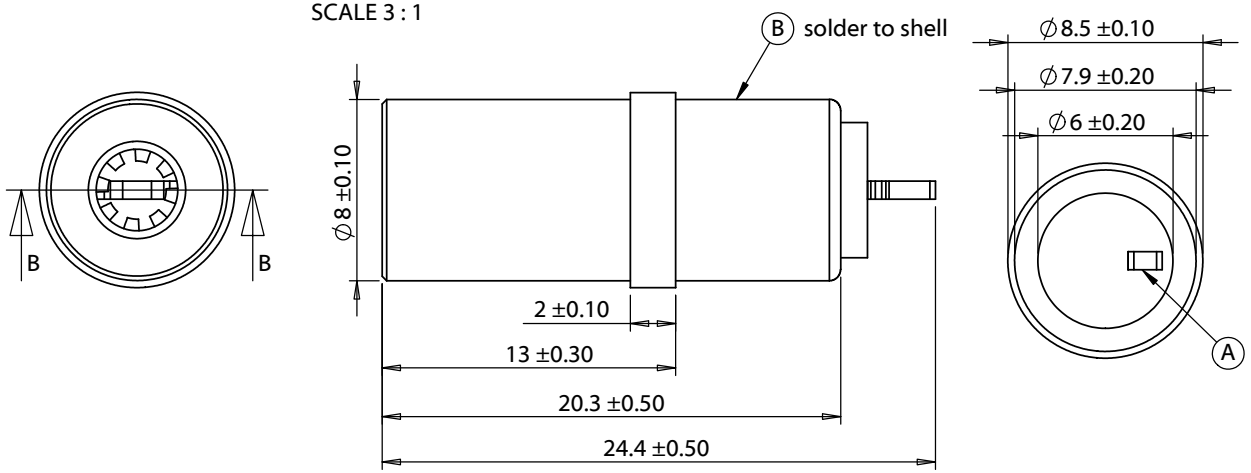

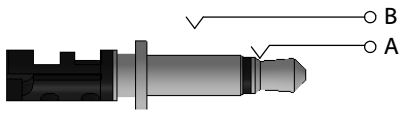

Schematic

Revision:	Date:	Description:
A	9/4/2009	Initial release

Prepared:
GL
2016.08.15 15:46:57 -07'00'

Verified:
PS
Digitally signed by PS
Date: 2016.08.15 16:57:55 -07'00'

Dimensions are in millimeters.
Tolerances:
X: ± 0.5 mm
X.X: ± 0.3 mm
X.XX: ± 0.05 mm

Notes:
RoHS and REACH compliant

Function test: no open, no short circuit, no intermittent

Description:
Connector, mono jack, 3.5x8.0xL24.4 mm, brass, nickel plated, molding style

TENSILITY
tel 1.541.323.3228 800 877.670.7118
fax 1.541.323.4202 web tensility.com

Size: A
Part number: 50-00037
Scale: 5:1
Sheet 1 of 1

5 4 3 2 1