THIS DRAWING IS UNPUBLISHED. RELEASED FOR PUBLICATION -,- .
© COPYRIGHT - By - ALL RIGHTS RESERVED.

LOC	DIST
DF	FO

REVISIONS

P	LTR	DESCRIPTION	DATE	DWN	APVD
	G1	REVISED PER ECO-11-005030	23MAR11	RK	HMR

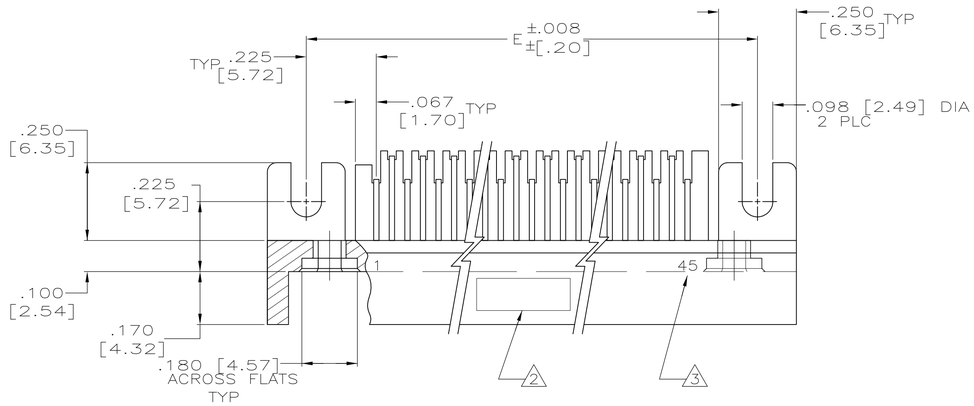

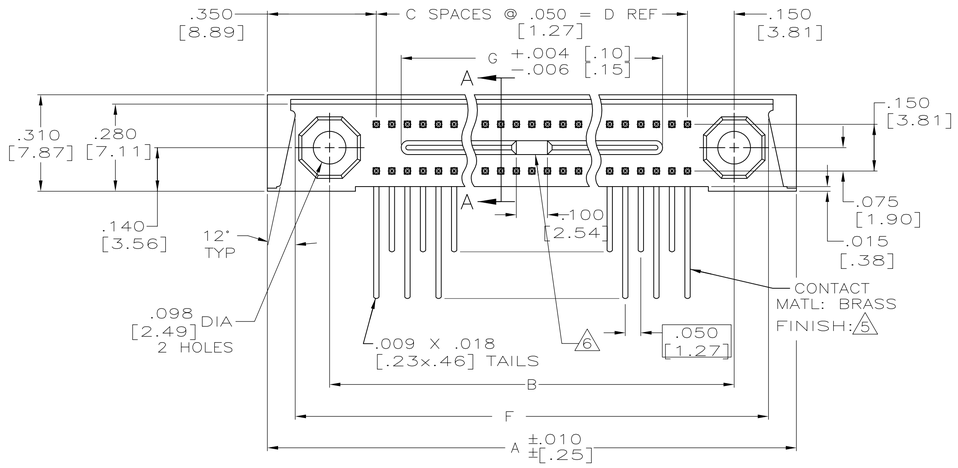

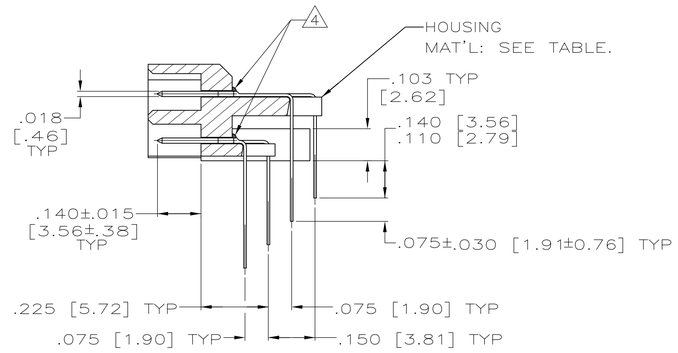

SECTION A—A
SCALE 4:1

1. CONNECTOR MEETS ALL APPLICABLE REQUIREMENTS OF MIL-C-55302.
2. AMP,00779, AMP PART NO, MILITARY PART NO.(PER TABLE) AND DATE CODE MARKED IN THIS APPROXIMATE AREA.
3. END CAVITY IDENTIFICATION NUMBERS (PER TABLE) MARKED THIS SIDE ONLY.
4. EPOXY, FOR CONTACT RETENTION, APPLIED TO CONTACT ROWS IN THIS AREA.
5. FINISH: PLATED GOLD .000050 THK PER MIL-G-45204 ON MATING END FOR A LENGTH OF .100 MIN, TAILS PLATED TIN-LEAD .000120 THK, ALL OVER NICKEL .000050 THK PER QQ-N-290.
6. SPACE IN TONGUE NOT APPLICABLE FOR 20 THRU 50 POSITIONS.
8. HOUSING MATERIAL: LIQUID CRYSTAL POLYMER PER MIL-M-24519, GLCP-30F; COLOR: GRAY.

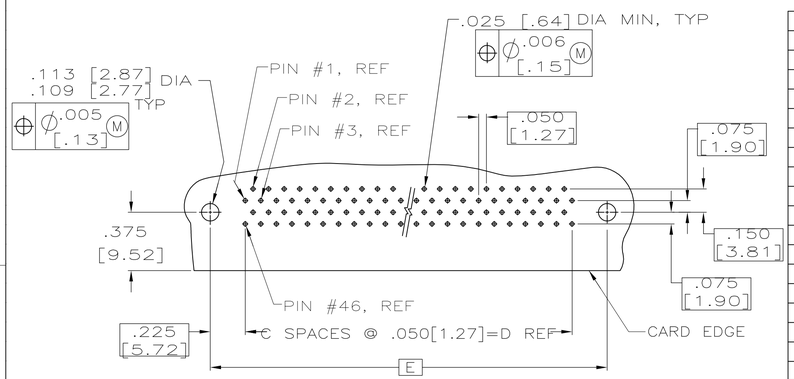

RECOMMENDED P.C. BOARD LAYOUT
(CONNECTOR SIDE)
SCALE: 2:1
90 POSN, REF

REMARKS	HSG MATERIAL	CAVITY IDENT	MILITARY PART NO	G	F	E	D	C	B	A	NO OF POSN	ASSEMBLY NUMBER
				DIMENSION								
	8	1 64	M55302/117-11	2.990 [75.95]	3.670 [93.22]	3.600 [91.44]	3.150 [80.01]	63	3.450 [87.63]	3.850 [97.79]	128	2-530743-2
	8	1 55	M55302/117-10	2.540 [64.52]	3.220 [81.79]	3.150 [80.01]	2.700 [68.58]	54	3.000 [76.20]	3.400 [86.36]	110	2-530743-1
	8	1 50	M55302/117-09	2.290 [58.17]	2.970 [75.44]	2.900 [73.66]	2.450 [62.23]	49	2.750 [69.85]	3.150 [80.01]	100	2-530743-0
	8	1 45	M55302/117-08	2.040 [51.82]	2.720 [69.09]	2.650 [67.31]	2.200 [55.88]	44	2.500 [63.50]	2.900 [73.66]	90	1-530743-9
	8	1 40	M55302/117-07	1.790 [45.47]	2.470 [62.74]	2.400 [60.96]	1.950 [49.53]	39	2.250 [57.15]	2.650 [67.31]	80	1-530743-8
	8	1 35	M55302/117-06	1.540 [39.12]	2.220 [56.39]	2.150 [54.61]	1.700 [43.18]	34	2.000 [50.80]	2.400 [60.96]	70	1-530743-7
	8	1 30	M55302/117-05	1.290 [32.77]	1.970 [50.04]	1.900 [48.26]	1.450 [36.83]	29	1.750 [44.45]	2.150 [54.61]	60	1-530743-6
	8	1 25	M55302/117-04	1.040 [26.42]	1.720 [43.69]	1.650 [41.91]	1.200 [30.48]	24	1.500 [38.10]	1.900 [48.26]	50	1-530743-5
	8	1 20	M55302/117-03	.790 [20.07]	1.470 [37.34]	1.400 [35.56]	.950 [24.13]	19	1.250 [31.75]	1.650 [41.91]	40	1-530743-4
	8	1 15	M55302/117-02	.540 [13.72]	1.220 [30.99]	1.150 [29.21]	.700 [17.78]	14	1.000 [25.40]	1.400 [35.56]	30	1-530743-3
	8	1 10	M55302/117-01	.290 [7.37]	.970 [24.64]	.900 [22.86]	.450 [11.43]	9	.750 [19.05]	1.150 [29.21]	20	1-530743-2
SUPSD BY 2--2												1-530743-1
SUPSD BY 2--1												1-530743-0
SUPSD BY 2--0												530743-9
SUPSD BY 1--9												530743-8
SUPSD BY 1--8												530743-7
SUPSD BY 1--7												530743-6
SUPSD BY 1--6												530743-5
SUPSD BY 1--5												530743-4
SUPSD BY 1--4			3	2								530743-3
SUPSD BY 1--3												530743-2
SUPSD BY 1--2												530743-1

THIS DRAWING IS A CONTROLLED DOCUMENT.

DIMENSIONS: INCHES[MM]

TOLERANCES UNLESS OTHERWISE SPECIFIED:
0 PLC ± –
1 PLC ± –
2 PLC ± –
3 PLC ± .005 [0.13]
4 PLC ± –
ANGLES ± –

MATERIAL –
FINISH –

DWN T.WIEST 3-8-90
CHK A.HOKE 6-21-90
APVD D.STONER 6-21-90
PRODUCT SPEC –
APPLICATION SPEC –
WEIGHT –

TE Connectivity

NAME PIN HEADER ASSY, MINI-BOX, RIGHT ANGLE, MILITARY

SIZE	CAGE CODE	DRAWING NO	RESTRICTED TO
A1	00779	C-530743	–

CUSTOMER DRAWING
SCALE 4:1 SHEET 1 OF 1 REV G1

4805 (3/11)