THIS DRAWING IS UNPUBLISHED. RELEASED FOR PUBLICATION -,- .
© COPYRIGHT - BY TYCO ELECTRONICS CORPORATION. ALL INTERNATIONAL RIGHTS RESERVED.

LOC	DIST
GP	00

REVISIONS

P	LTR	DESCRIPTION	DATE	DWN	APVD
	C	REVISED PER ECO-11-003735	16MAR2011	CJV	SLB

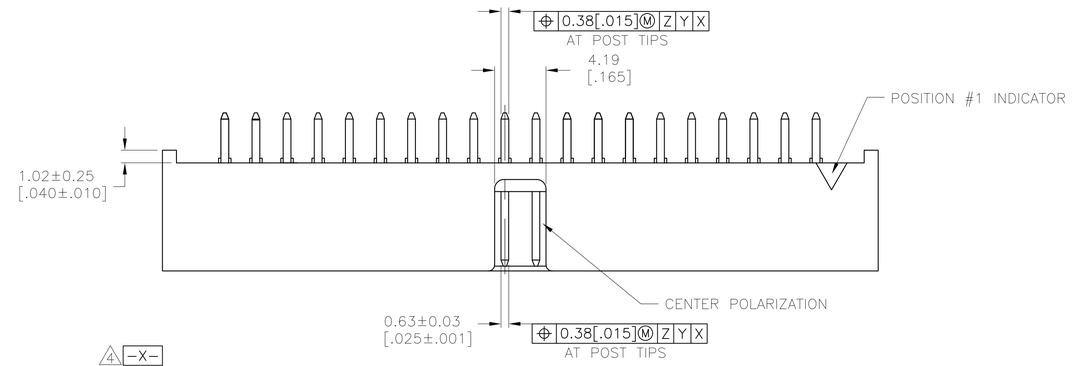

1. HOUSING: POLYESTER OR NYLON, COLOR BLACK.
   POSTS: BRASS.
2. POSTS: GOLD FLASH OVER PALLADIUM-NICKEL PLATE, 0.38μm[.000015] MIN TOTAL ON THE MATING SURFACES, 2.54μm[.000100] MIN TIN-LEAD PLATE ON THE SOLDER-TAILS, 1.27μm[.000050] MIN NICKEL UNDERPLATE ON THE ENTIRE POST.
   -OR-
   .38μm[.000015] MIN GOLD PLATE ON THE MATING SURFACES, 2.54μm[.000100] MIN TIN-LEAD PLATE ON THE SOLDER-TAILS, 1.27μm[.000050] MIN NICKEL UNDERPLATE ON THE ENTIRE POST.
3. OPTIONAL TYCO IDENTIFICATION NUMBER (DATE CODE). LOCATION APPROXIMATELY WHERE SHOWN.
4. DATUMS X & Y APPLY IN ZONE 1.
5. DATUMS V & W TO BE ESTABLISHED BY CUSTOMER.

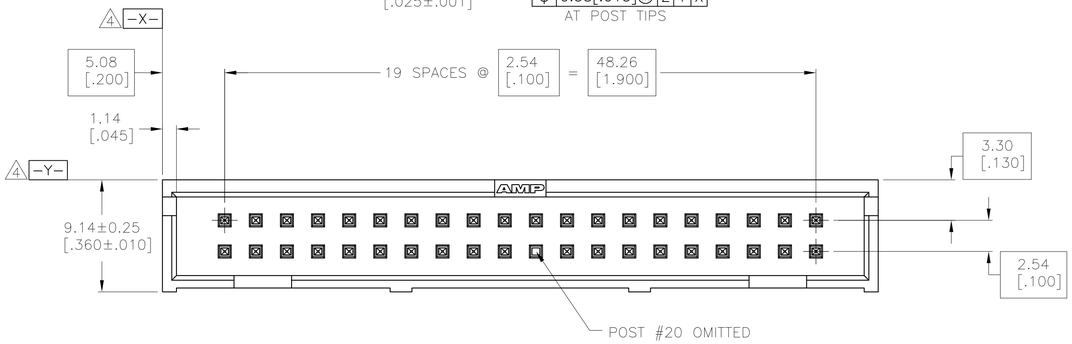

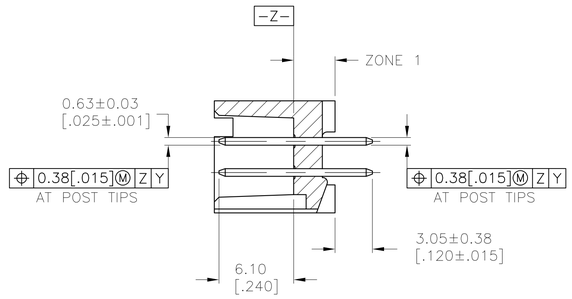

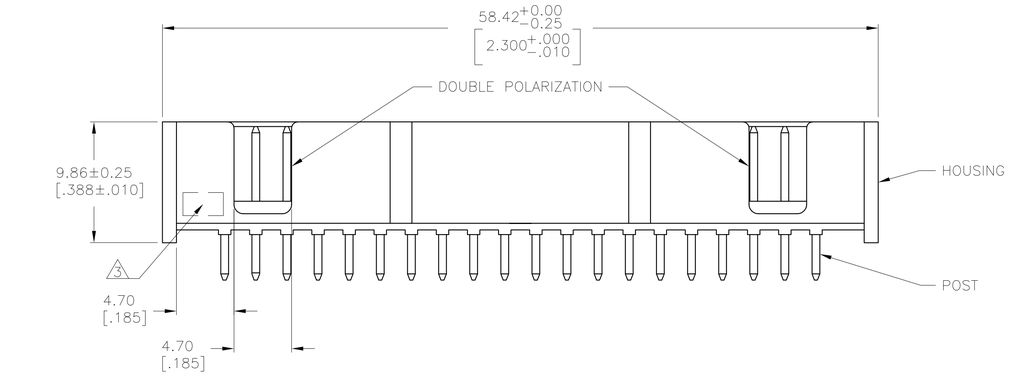

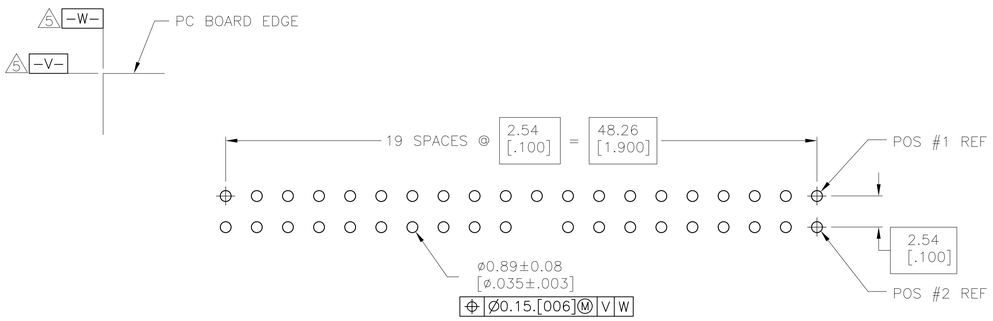

RECOMMENDED PC BOARD LAYOUT
(VIEWED FROM CONNECTOR SIDE)

AS SHOWN	111782-8
DESCRIPTION	PART NUMBER

THIS DRAWING IS A CONTROLLED DOCUMENT.

DIMENSIONS: mm [INCHES]

TOLERANCES UNLESS OTHERWISE SPECIFIED:
0 PLC ± -
1 PLC ± -
2 PLC ± -
3 PLC ± 0.13[.005]
4 PLC ± -
ANGLES ± -

MATERIAL 1
FINISH 2

DWN J.GERACE 06DEC04
CHK S.BOLASH 06DEC04
APVD M.WALMSLEY 06DEC04
PRODUCT SPEC 108-40018
APPLICATION SPEC —
WEIGHT —

Tyco Electronics
Tyco Electronics Corporation
Harrisburg, PA 17105-3608

NAME
HEADER ASSEMBLY, VERTICAL,
40 POSITION, SELECTIVELY LOADED,
LOW PROFILE, AMP-LATCH

SIZE	CAGE CODE	DRAWING NO	RESTRICTED TO
A1	00779	C-111782-8	—

CUSTOMER DRAWING | SCALE 4:1 | SHEET 1 OF 1 | REV C