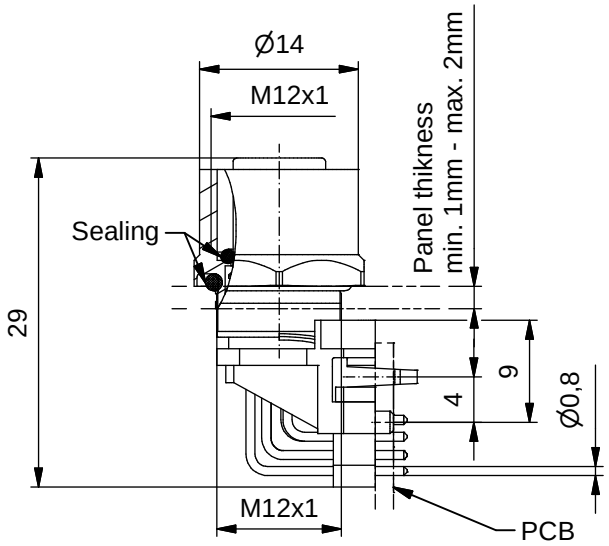


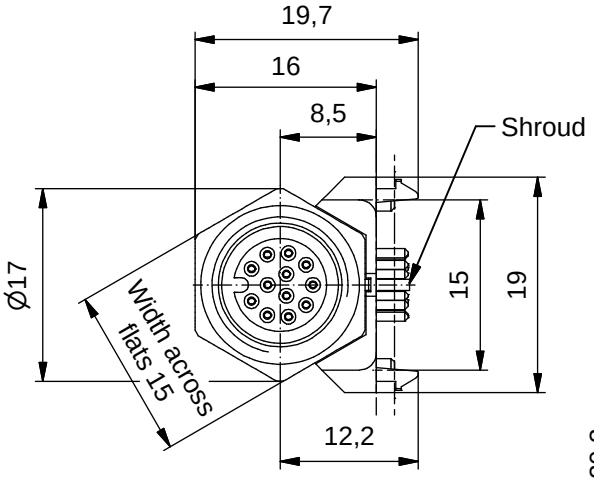


**Technical specification:**

| | |
|---|---|
| Rated voltage:<br>IEC 61076-2-101 | 30 V |
| Current rating:<br>IEC 61076-2-101 | 1,5 A at 40°C |
| Insulation resistance:<br>IEC 60512 | >=100 MΩ |
| Pollution degree:<br>IEC 60664-1 | 3/2 |
| Degree of protection:<br>IEC 60529 | IP 67, in<br>mated condition |
| Temperature range:<br>EN 60512-11-10<br>EN 60512-11-4 | -30°C ... +85°C<br>-40°C<br>-40°C ... +85°C |
| Mating cycles:<br>IEC 60512-9a | >=100 |

**Materials:**

| | |
|---|---|
| Contact: | CuZn, Ni b / Au 0,2 gal. |
| Contact carrier: | PA, UL 94 V-0 |
| Sealing: | FPM |
| Socket housing: | CuZn, nickel plated |
| Shroud: | CuSn6 / Sn |

**Installation specification:**

| | |
|---|---|
| Recommended torque: | 0,8-1 Nm |
| Conec installation tool: | Torque wrench:<br>36-000200<br>Insert across flats 15:<br>36-000320 |
| Installation hole: | see fig.1 43K1A1791 |

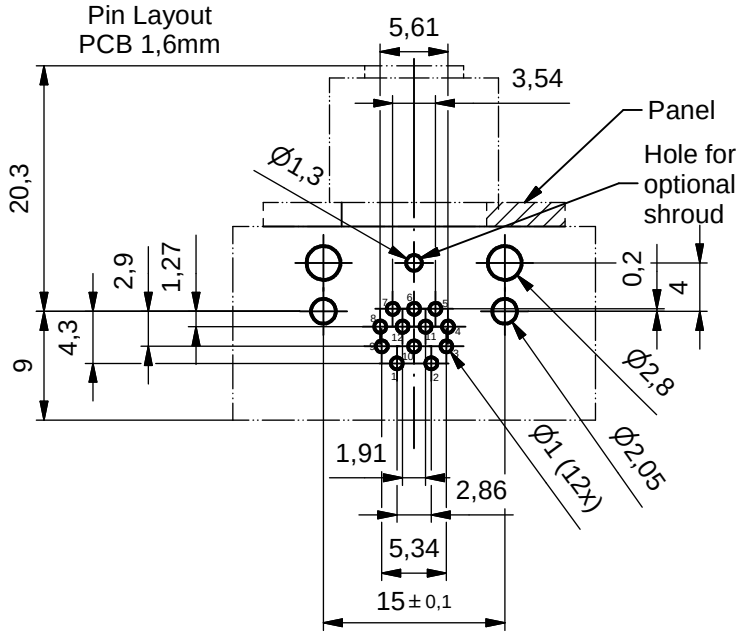


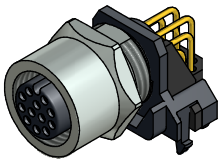

| Part no: | Description: | Pos | Note: |
|---|---|---|---|
| 43-02640 | SAL - 12 - FKW12 | 12 | |
| 43-02641 | SAL - 12S - FKW12 | 12 | with shroud |

DO NOT ALTER CAD DRAWING BY HAND

RoHS & REACH compliant

dim. in mm

| | date | name |
|---|---|---|
| drawn | 07.08.15 | Böckeler |
| appd. | 07.08.15 | Franz |

general tolerance:

| | |
|---|---|
| 0 | ± 0,50mm |
| 0,0 | ± 0,25mm |
| 0,00 | ± 0,10mm |
| ∡ | ± 5° |

title: Female socket M12x1 ngled, frontmounting, dip solder

dwg no: 43K1A3062

part no: see table

THIS DRAWING MAY NOT BE COPIED OR REPRODUCED IN ANY WAY, AND MAY NOT BE PASSED ON TO A THIRD PARTY WITHOUT WRITTEN PERMISSION. OWNERSHIP AND COPYRIGHT OF CONEC GmbH