ON Semiconductor®

NC7SZ14
TinyLogic® UHS Inverter with Schmitt Trigger Input

Features

- Ultra-High Speed: t_{PD} 3.7ns (Typical) into 50pF at 5V V_{CC}
- High Output Drive: ±24mA at 3V V_{CC}
- Broad V_{CC} Operating Range: 1.65V to 5.5V
- Matches Performance of LCX when Operated at 3.3V V_{CC}
- Power Down High Impedance Inputs/Outputs
- Over-Voltage Tolerance Inputs Facilitate 5V to 3V Translation
- Proprietary Noise/EMI Reduction Circuitry
- Ultra-Small MicroPak™ Packages
- Space-Saving SOT23 and SC70 Packages

Description

The NC7SZ14 is a single inverter with Schmitt trigger input from ON Semiconductor's Ultra-High Speed (UHS) series of TinyLogic®. The device is fabricated with advanced CMOS technology to achieve ultra-high speed with high output drive while maintaining low static power dissipation over a very broad V_{CC} operating range. The device is specified to operate over the 1.65V to 5.5V V_{CC} range. The inputs and outputs are high-impedance when V_{CC} is 0V. Inputs tolerate voltages up to 6V independent of V_{CC} operating voltage.

Ordering Information

Part Number	Operating Temperature	Top Mark	Eco Status	Package	Packing Method
NC7SZ14M5X	-40 to +85°C	7Z14	RoHS	5-Lead, SOT23, JEDEC MO-178, 1.6mm	3000 Units on Tape & Reel
NC7SZ14P5X	-40 to +85°C	Z14	RoHS	5-Lead SC70, EIAJ SC-88a, 1.25mm Wide	3000 Units on Tape & Reel
NC7SZ14L6X	-40 to +85°C	B6	RoHS	6-Lead MicroPak™, 1.00mm Wide	5000 Units on Tape & Reel
NC7SZ14FHX	-40 to +85°C	B6	Green	6-Lead, MicroPak2, 1x1mm Body, .35mm Pitch	5000 Units on Tape & Reel

October-2017, Rev. 2

Publication Order Number:
NC7SZ14/D

Connection Diagrams

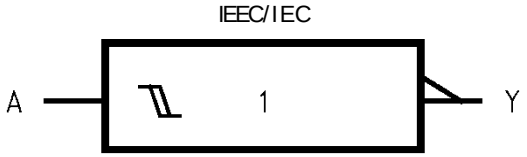

Figure 1. Logic Symbol

Pin Configurations

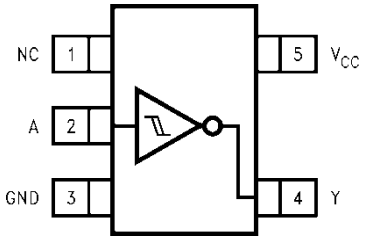

Figure 2. SOT23 and SC70 (Top View)

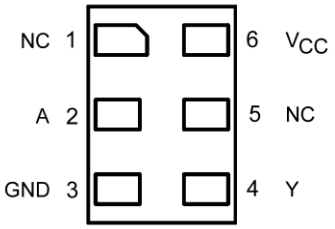

Figure 3. MicroPak (Top Through View)

Pin Definitions

Pin # SOT23 and SC70	Pin # MicroPak	Name	Description
1	1, 5	NC	No Connect
2	2	A	Input
3	3	GND	Ground
4	4	Y	Output
5	6	VCC	Supply Voltage

Function Table

Y = /A

Inputs	Output
A	**Y**
L	H
H	L

H = HIGH Logic Level

L = LOW Logic Level

Absolute Maximum Ratings

Stresses exceeding the absolute maximum ratings may damage the device. The device may not function or be operable above the recommended operating conditions and stressing the parts to these levels is not recommended. In addition, extended exposure to stresses above the recommended operating conditions may affect device reliability. The absolute maximum ratings are stress ratings only.

Symbol	Parameter		Min.	Max.	Unit
V_{CC}	Supply Voltage		-0.5	6.0	V
V_{IN}	DC Input Voltage		-0.5	6.0	V
V_{OUT}	DC Output Voltage		-0.5	6.0	V
I_{IK}	DC Input Diode Current	V_{IN} < -0.5V		-50	mA
		V_{IN} > 6.0V		+20	
I_{OK}	DC Output Diode Current	V_{OUT} < -0.5V		-50	mA
		V_{OUT} > 6.0V, V_{CC}=GND		+20	
I_{OUT}	DC Output Current			±50	mA
I_{CC} or I_{GND}	DC V_{CC} or Ground Current			±50	mA
T_{STG}	Storage Temperature Range		-65	+150	°C
T_J	Junction Temperature Under Bias			+150	°C
T_L	Junction Lead Temperature (Soldering, 10 Seconds)			+260	°C
P_D	Power Dissipation at +85°C	SOT-23		200	mW
		SC70-5		150	
		MicroPak-6		130	
		MicroPak2-6		120	
ESD	Human Body Model, JEDEC:JESD22-A114			4000	V
	Charge Device Model, JEDEC:JESD22-C101			2000	

Recommended Operating Conditions[1]

The Recommended Operating Conditions table defines the conditions for actual device operation. Recommended operating conditions are specified to ensure optimal performance to the datasheet specifications. ON Semiconductor does not recommend exceeding them or designing to Absolute Maximum Ratings.

Symbol	Parameter	Conditions	Min.	Max.	Unit
V_{CC}	Supply Voltage Operating		1.65	5.50	V
	Supply Voltage Data Retention		1.5	5.5	
V_{IN}	Input Voltage		0	5.5	V
V_{OUT}	Output Voltage		0	V_{CC}	V
T_A	Operating Temperature		-40	+85	°C
θ_{JA}	Thermal Resistance	SOT-23		300	°C/W
		SC70-5		425	
		MicroPak-6		500	
		MicroPak2-6		560	

Note:
1. Unused inputs must be held HIGH or LOW. They may not float.

DC Electrical Characteristics

Symbol	Parameter	V_{CC} (V)	Conditions	T_A=+25°C			T_A=-40 to +85°C		Units
				Min.	Typ.	Max.	Min.	Max.	
V_P	Positive Threshold Voltage	1.65		0.60	1.00	1.40	0.60	1.40	
		1.80		0.70	1.10	1.50	0.70	1.50	
		2.30		1.00	1.40	1.80	1.00	1.80	
		3.00		1.30	1.75	2.20	1.30	2.20	
		4.50		1.90	2.45	3.10	1.90	3.10	
		5.50		2.20	2.90	3.60	2.20	3.60	
V_N	Negative Threshold Voltage	1.65		0.20	0.50	0.80	0.20	0.80	V
		1.80		0.25	0.55	0.90	0.25	0.90	
		2.30		0.40	0.75	1.15	0.40	1.15	
		3.00		0.60	1.00	1.50	0.60	1.50	
		4.50		1.00	1.43	2.00	1.00	2.00	
		5.50		1.20	1.70	2.30	1.20	2.30	
V_H	Hysteresis Voltage	1.65		0.10	0.48	0.90	0.10	0.90	V
		1.80		0.15	0.54	1.00	0.15	1.00	
		2.30		0.25	0.65	1.10	0.25	1.10	
		3.00		0.40	0.77	1.20	0.40	1.20	
		4.50		0.60	1.01	1.50	0.60	1.50	
		5.50		0.70	1.18	1.70	0.70	1.70	
V_{OH}	HIGH Level Output Voltage	1.65	$V_{IN}=V_{IL}$, I_{OH}=-100µA	1.55	1.65		1.55		V
		1.80		1.70	1.80		1.70		
		2.30		2.20	2.30		2.20		
		3.00		2.90	3.00		2.90		
		4.50		4.40	4.50		4.40		
		1.65	I_{OH}=-4mA	1.29	1.52		1.29		
		2.30	I_{OH}=-8mA	1.90	2.15		1.90		
		3.00	I_{OH}=-16mA	2.40	2.80		2.40		
		3.00	I_{OH}=-24mA	2.30	2.68		2.30		
		4.50	I_{OH}=-32mA	3.80	4.20		3.80		
V_{OL}	LOW Level Output Voltage	1.65	$V_{IN}=V_{IH}$, I_{OL}=100µA		0.00	0.10		0.10	V
		1.80			0.00	0.10		0.10	
		2.30			0.00	0.10		0.10	
		3.00			0.00	0.10		0.10	
		4.50			0.00	0.10		0.10	
		1.65	I_{OL}=4mA		0.08	0.24		0.24	
		2.30	I_{OL}=8mA		0.10	0.30		0.30	
		3.00	I_{OL}=16mA		0.15	0.40		0.40	
		3.00	I_{OL}=24mA		0.22	0.55		0.55	
		4.50	I_{OL}=32mA		0.22	0.55		0.55	
I_{IN}	Input Leakage Current	0 to 5.5	V_{IN}=5.5V, GND			±0.1		±1.0	µA
I_{OFF}	Power Off Leakage Current	0	V_{IN} or V_{OUT}=5.5V			1		10	µA
I_{CC}	Quiescent Supply Current	1.65 to 5.50	V_{IN}=5.5V, GND			1.0		10	µA

AC Electrical Characteristics

Symbol	Parameter	V_{CC} (V)	Conditions	T_A=+25°C			T_A=-40 to +85°C		Units	Figure
				Min.	Typ.	Max.	Min.	Max.		
t_{PLH}, t_{PHL}	Propagation Delay	1.65	C_L=15pF, R_L=1MΩ	2.0	9.1	15.0	2.0	15.6	ns	Figure 4 Figure 5
		1.80		2.0	7.6	12.5	2.0	13.0		
		2.50 ± 0.20		1.0	5.0	9.0	1.0	9.5		
		3.30 ± 0.30		1.0	3.7	6.3	1.0	6.5		
		5.00 ± 0.50		0.5	3.1	5.2	0.5	5.5		
		3.30 ± 0.30	C_L=50pF, R_L=500Ω	1.5	4.4	7.2	1.5	7.5		Figure 4 Figure 5
		5.00 ± 0.50		0.8	3.7	5.9	0.8	6.2		
C_{IN}	Input Capacitance	0.00			4				pF	
C_{PD}	Power Dissipation Capacitance(2)	3.30			24					Figure 6
		5.00			30					

Note:
2. C_{PD} is defined as the value of the internal equivalent capacitance which is derived from dynamic operating current consumption (I_{CCD}) at no output loading and operating at 50% duty cycle. C_{PD} is related to I_{CCD} dynamic operating current by the expression: $I_{CCD}=(C_{PD})(V_{CC})(f_{IN})+(I_{CC}static)$.

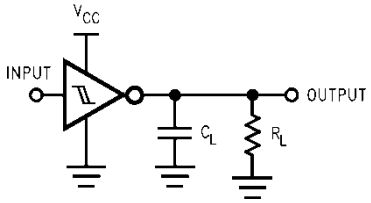

Note:
3. C_L includes load and stray capacitance; Input PRR=1.0MHz; t_W=500ns

Figure 4. AC Test Circuit

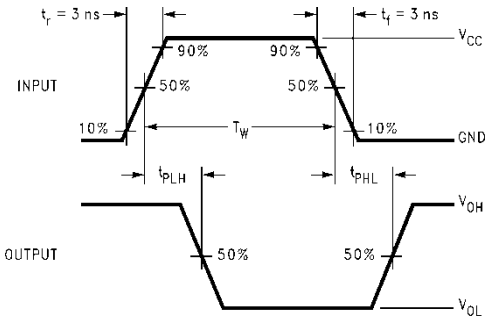

Figure 5. AC Waveforms

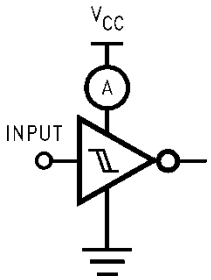

Note:
4. Input=AC Waveform; t_r=t_f=1.8ns; PRR=10MHz; Duty Cycle =50%.

Figure 6. I_{CCD} Test Circuit

Physical Dimensions

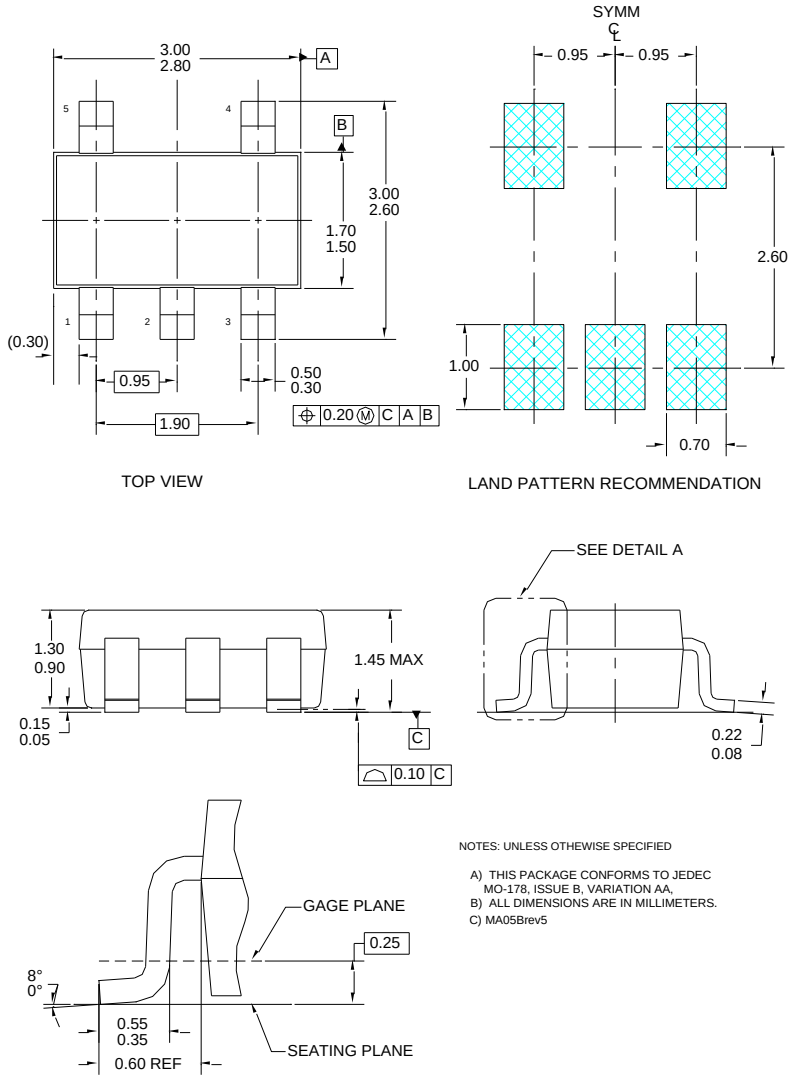

Figure 7. 5-Lead SOT23, JEDEC MO-178 1.6mm

Package drawings are provided as a service to customers considering ON Semiconductor components. Drawings may change in any manner without notice. Please note the revision and/or date on the drawing and contact a ON Semiconductor representative to verify or obtain the most recent revision. Package specifications do not expand the terms of ON Semiconductor's worldwide terms and conditions, specifically the warranty therein, which covers ON Semiconductor products.

Tape and Reel Specifications

Package Designator	Tape Section	Cavity Number	Cavity Status	Cover Type Status
M5X	Leader (Start End)	125 (Typical)	Empty	Sealed
	Carrier	3000	Filled	Sealed
	Trailer (Hub End)	75 (Typical)	Empty	Sealed

Physical Dimensions (Continued)

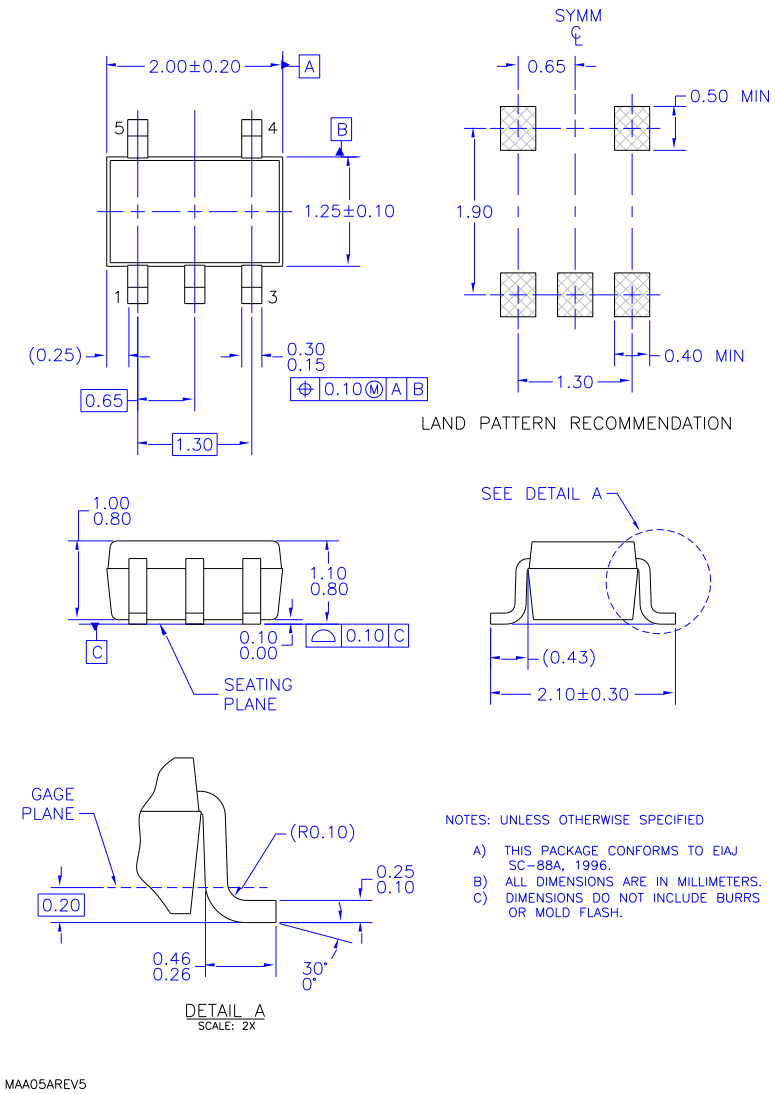

Figure 8. 5-Lead, SC70, EIAJ SC-88a, 1.25mm Wide

Package drawings are provided as a service to customers considering ON Semiconductor components. Drawings may change in any manner without notice. Please note the revision and/or date on the drawing and contact a ON Semiconductor representative to verify or obtain the most recent revision. Package specifications do not expand the terms of ON Semiconductor's worldwide terms and conditions, specifically the warranty therein, which covers ON Semiconductor products.

Tape and Reel Specifications

Package Designator	Tape Section	Cavity Number	Cavity Status	Cover Type Status
P5X	Leader (Start End)	125 (Typical)	Empty	Sealed
	Carrier	3000	Filled	Sealed
	Trailer (Hub End)	75 (Typical)	Empty	Sealed

Physical Dimensions (Continued)

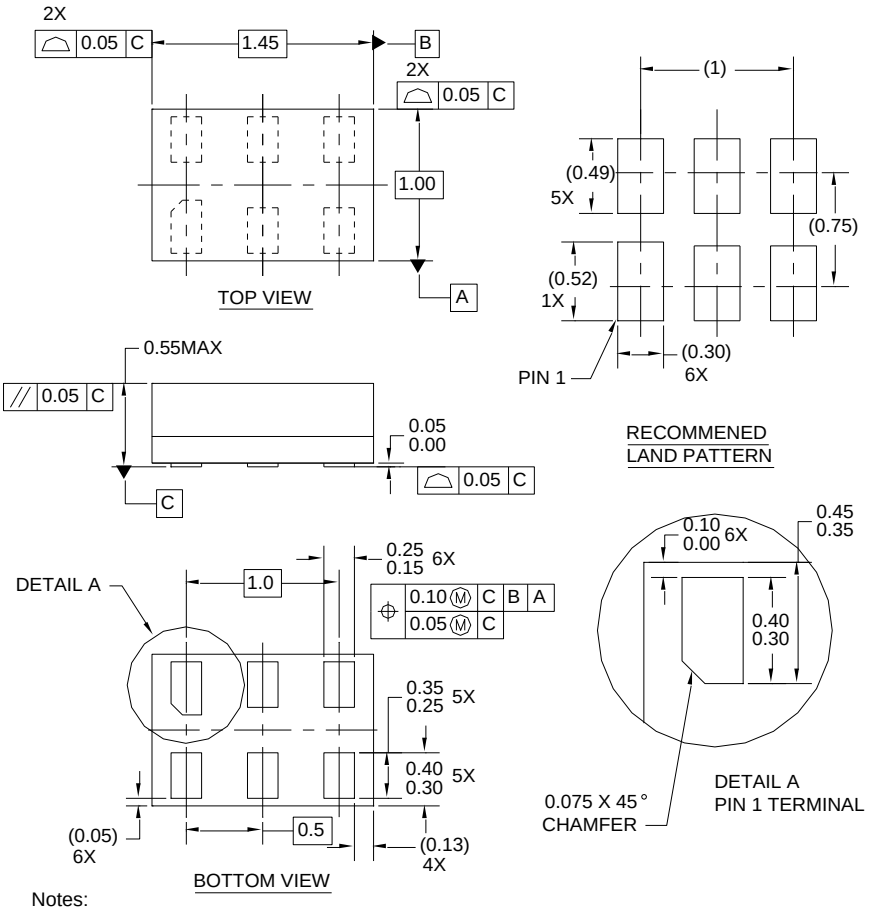

Notes:

1. CONFORMS TO JEDEC STANDARD M0-252 VARIATION UAAD
2. DIMENSIONS ARE IN MILLIMETERS
3. DRAWING CONFORMS TO ASME Y14.5M-1994

MAC06AREVC

Figure 9. 6-Lead, MicroPak™, 1.0mm Wide

Package drawings are provided as a service to customers considering ON Semiconductor components. Drawings may change in any manner without notice. Please note the revision and/or date on the drawing and contact a ON Semiconductor representative to verify or obtain the most recent revision. Package specifications do not expand the terms of ON Semiconductor's worldwide terms and conditions, specifically the warranty therein, which covers ON Semiconductor products.

Tape and Reel Specification

Package Designator	Tape Section	Cavity Number	Cavity Status	Cover Type Status
L6X	Leader (Start End)	125 (Typical)	Empty	Sealed
	Carrier	5000	Filled	Sealed
	Trailer (Hub End)	75 (Typical)	Empty	Sealed

Physical Dimensions (Continued)

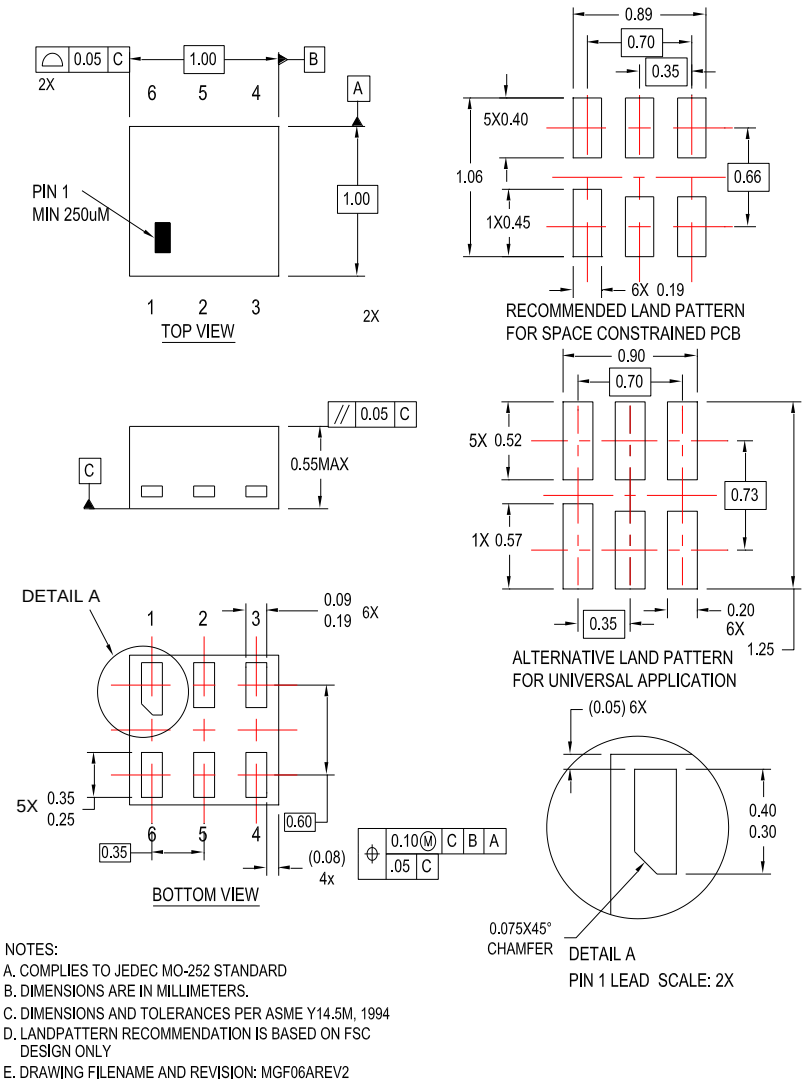

NOTES:
A. COMPLIES TO JEDEC MO-252 STANDARD
B. DIMENSIONS ARE IN MILLIMETERS.
C. DIMENSIONS AND TOLERANCES PER ASME Y14.5M, 1994
D. LANDPATTERN RECOMMENDATION IS BASED ON FSC DESIGN ONLY
E. DRAWING FILENAME AND REVISION: MGF06AREV2

Figure 10.6-Lead, MicroPak2, 1x1mm Body, .35mm Pitch

Package drawings are provided as a service to customers considering ON Semiconductor components. Drawings may change in any manner without notice. Please note the revision and/or date on the drawing and contact a ON Semiconductor representative to verify or obtain the most recent revision. Package specifications do not expand the terms of ON Semiconductor's worldwide terms and conditions, specifically the warranty therein, which covers ON Semiconductor products.

Tape and Reel Specification

Package Designator	Tape Section	Cavity Number	Cavity Status	Cover Type Status
FHX	Leader (Start End)	125 (Typical)	Empty	Sealed
	Carrier	5000	Filled	Sealed
	Trailer (Hub End)	75 (Typical)	Empty	Sealed

PUBLICATION ORDERING INFORMATION

LITERATURE FULFILLMENT:

Literature Distribution Center for ON Semiconductor
19521 E. 32nd Pkwy, Aurora, Colorado 80011 USA
Phone: 303-675-2175 or 800-344-3860 Toll Free USA/Canada
Fax: 303-675-2176 or 800-344-3867 Toll Free USA/Canada
Email: orderlit@onsemi.com

N. American Technical Support: 800-282-9855 Toll Free USA/Canada.
Europe, Middle East and Africa Technical Support: Phone: 421 33 790 2910
Japan Customer Focus Center
Phone: 81-3-5817-1050

ON Semiconductor Website: www.onsemi.com

Order Literature: http://www.onsemi.com/orderlit

For additional information, please contact your local Sales Representative