THIS DRAWING IS UNPUBLISHED. RELEASED FOR PUBLICATION 19
© COPYRIGHT 20 - ALL RIGHTS RESERVED.

LOC	DIST
AD	47

REVISIONS

P	LTR	DESCRIPTION	DATE	DWN	APVD
	C	REVISED PER ECO-11-013132	13JUL2011	HMR	MH

1. CONTACT MATING AREA MEETS THE PERFORMANCE REQUIREMENTS OF TE CONNECTIVITY PRODUCT SPECIFICATION 108-1957; BASED ON TELCORDIA GR-1217-CORE, APPLICATIONS IN UNCONTROLLED ENVIRONMENTS.
2. PHOSPHOR BRONZE
3. GLASS FILLED POLYESTER
4. DATUMS AND BASIC DIMENSIONS ESTABLISHED BY CUSTOMER
5. CONNECTOR MARKED WITH PART NUMBER AND DATE CODE
6. DRILLED HOLE DIAMETER 0.7±0.025
   FINISHED HOLE DIA 0.60±0.05 REF
   COPPER THICKNESS 0.025-0.050
   TIN LEAD THICKNESS 0.004-0.010
7. CONTACT AREA LUBRICATED WITH BELLCORE APPROVED LUBRICANT
   TECHNICAL REFERENCE: GR-1217-CORE, ISSUE 1, NOVEMBER 1995

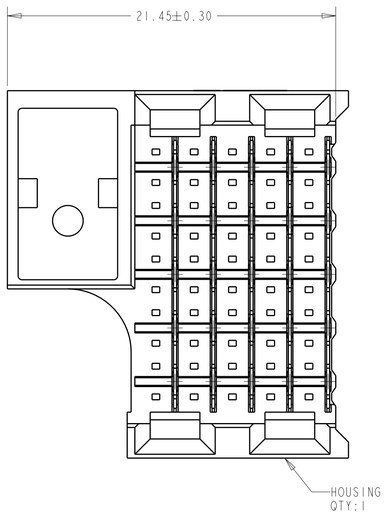

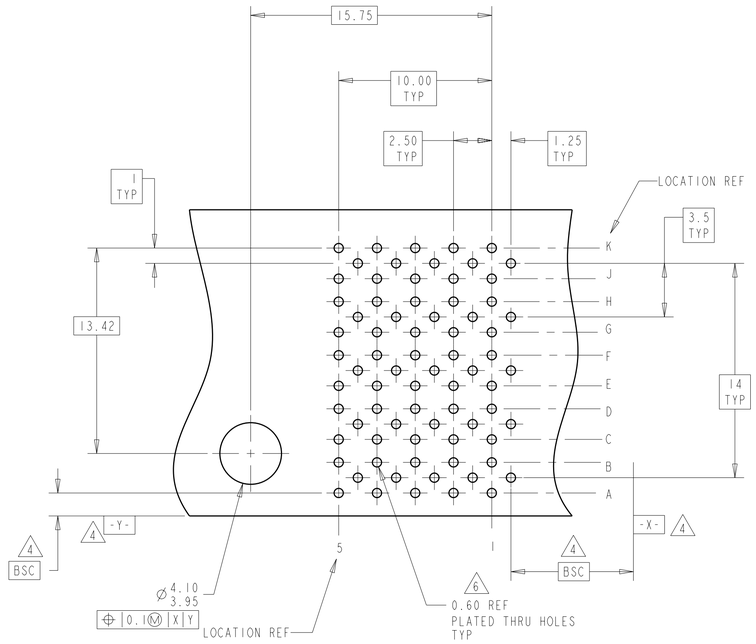

RECOMMENDED
PRINTED CIRCUIT BOARD
LAYOUT
COMPONENT SIDE OF PRINTED CIRCUIT BOARD

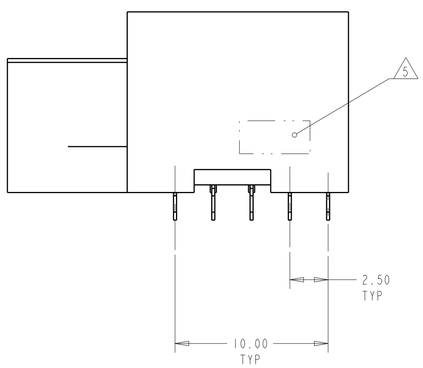

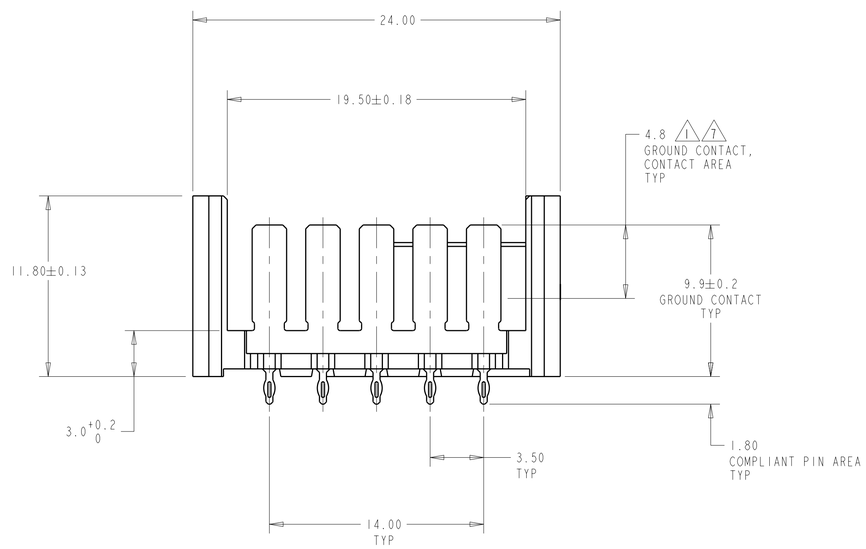

120667-1

PART NUMBER

THIS DRAWING IS A CONTROLLED DOCUMENT.

DIMENSIONS: mm

TOLERANCES UNLESS OTHERWISE SPECIFIED:
0 PLC ±-
1 PLC ±-
2 PLC ±0.13
3 PLC ±0.05
4 PLC ±-
ANGLES ±-

MATERIAL
HOUSING: 3
CONTACTS: 2

FINISH
GROUND CONTACT: 1

DWN	H MOLL	11JAN99
CHK	S MICKIEVCZ	30JUN99
APVD	H ANDREWS	30JUN99
PRODUCT SPEC	-	
APPLICATION SPEC	-	
WEIGHT	-	

TE Connectivity

NAME: SHROUD ASSEMBLY, 50 POSITION, RIGHT HAND, 10 ROW, Z-PACK HS3

SIZE	CAGE CODE	DRAWING NO	RESTRICTED TO
A1	00779	C-120667	-

CUSTOMER DRAWING | SCALE 5:1 | SHEET 1 OF 1 | REV C

4805 (3/11)

Pro/ENGINEER DRAWING