MICRO SWITCH
FREEPORT, ILLINOIS, U.S.A.
A DIVISION OF HONEYWELL

FED. MFG. CODE 81929

ASSEMBLY-PUSHBUTTON SWITCH

CATALOG LISTING
2PB43

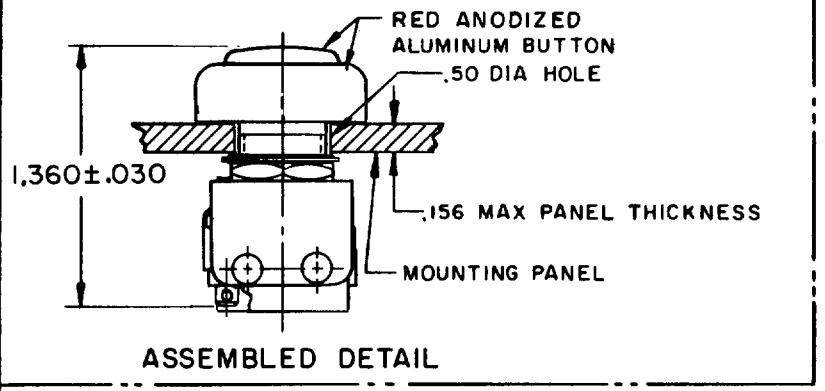

ASSEMBLED DETAIL

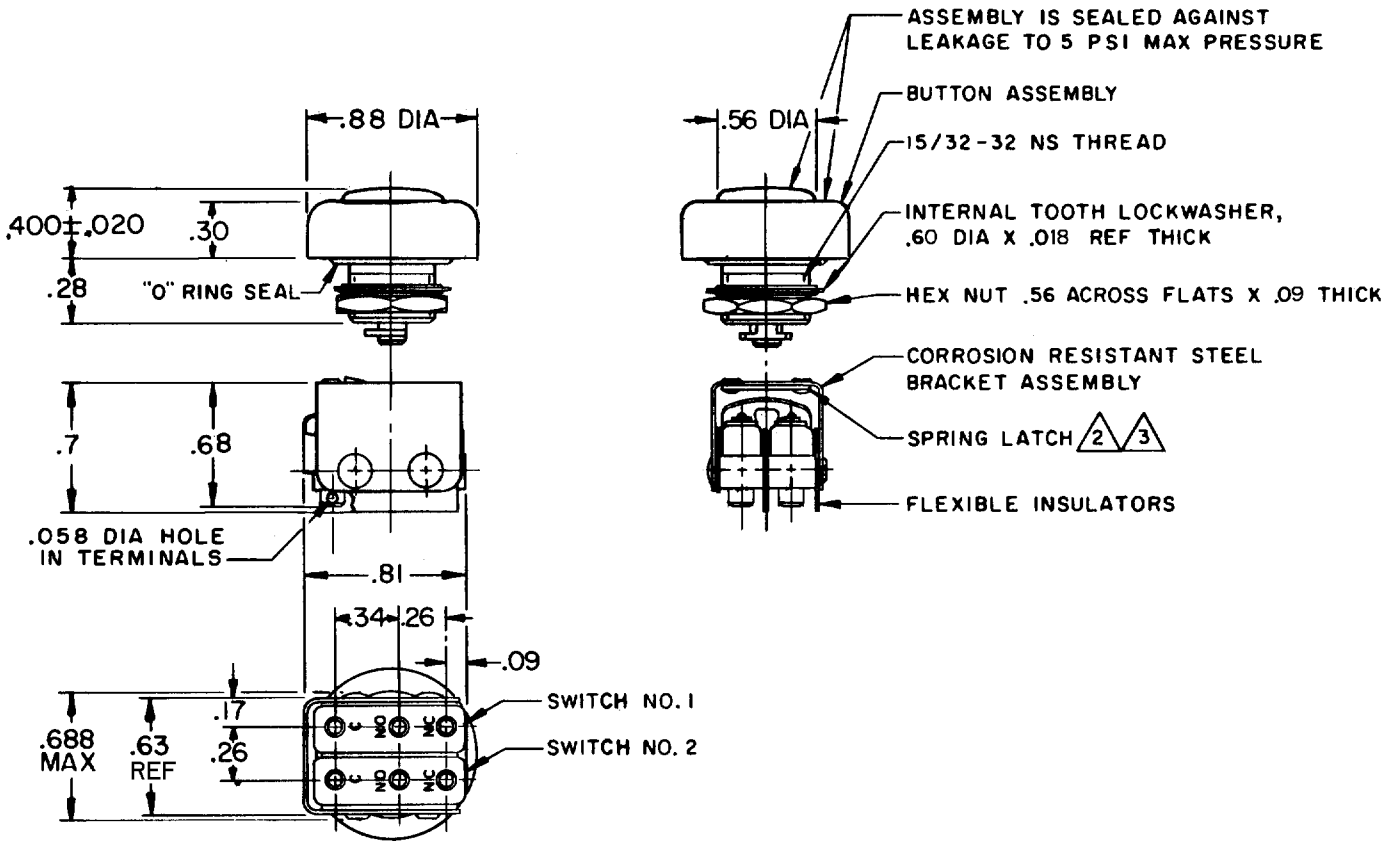

NOTES
1 - UNIT INCLUDES CATALOG LISTING "ISM" TYPE BASIC SWITCH (2)
2 SPRING LATCH PERMITS ASSEMBLY AND DISASSEMBLY AS REQUIRED
3 "D" SHAPED HOLE IN SPRING LATCH PREVENTS ROTATION BETWEEN THE TWO PARTS
4 - ASSEMBLY IS COMPLETED AFTER INSTALLING BUTTON TO PANEL
5 - SWITCHES DO NOT NECESSARILY OPERATE SIMULTANEOUSLY
6 - TERMINALS ARE PLATED FOR SOLDERING

THIS DRAWING COVERS A PROPRIETARY ITEM AND IS THE PROPERTY OF MICRO SWITCH, A DIVISION OF HONEYWELL. THIS DRAWING IS NOT TO BE COPIED OR USED WITHOUT THE APPROVAL OF MICRO SWITCH.

CHARACTERISTICS

OPERATING FORCE — — 2 1/2 LB APPROX
PLUNGER TRAVEL — — — — .062 APPROX

ELECTRICAL DATA

CONTACT ARRANGEMENT
S P D T (2)

250 VAC — — — — — — — — — — — — — — 5 AMP
30 VOLTS DC RATING
INDUCTIVE — — — — SEA LEVEL — — — 3 AMP
50,000 FT — — 2.5 AMP
RESISTIVE — — — — SEA LEVEL — — — 5 AMP
50,000 FT — — — 5 AMP
MAXIMUM INRUSH — — — — — — — — 24 AMP

SCALE FULL
DO NOT SCALE PRINT

UNLESS OTHERWISE NOTED
DIMENSIONS ARE IN INCHES
TOLERANCES ARE:

ONE PLACE	(.0)	±.030
TWO PLACE	(.00)	±.015
THREE PLACE	(.000)	±.005
ANGLES		±

WEIGHT

2PB43	REPLACES		
M PAGE 1 OF 1	RELEASE NO.		
DRAWING NUMBER			
6			
ISSUE			
	CHECK		
REVISIONS			
A C019743 M B F 2 APR 65			
B C020470 M B F 2 SEP 65			
C C095143 D L T 15 JUL 99			
	CHECK		
		LSD	8 APR 68
	CHECK		
		M B F	2 APRIL 65
	DRAWN		

FORMTEK
FO-50378