Aug.1.2018 Copyright 2018 HIROSE ELECTRIC CO., LTD. All Rights Reserved.
In case that the application demands a high level of reliability, such as automotive,
please contact a company representative for further information.

	COUNT	DESCRIPTION OF REVISIONS	BY	CHKD	DATE		COUNT	DESCRIPTION OF REVISIONS	BY	CHKD	DATE
△					. .	△					. .
△					. .	△					. .
△					. .	△					. .

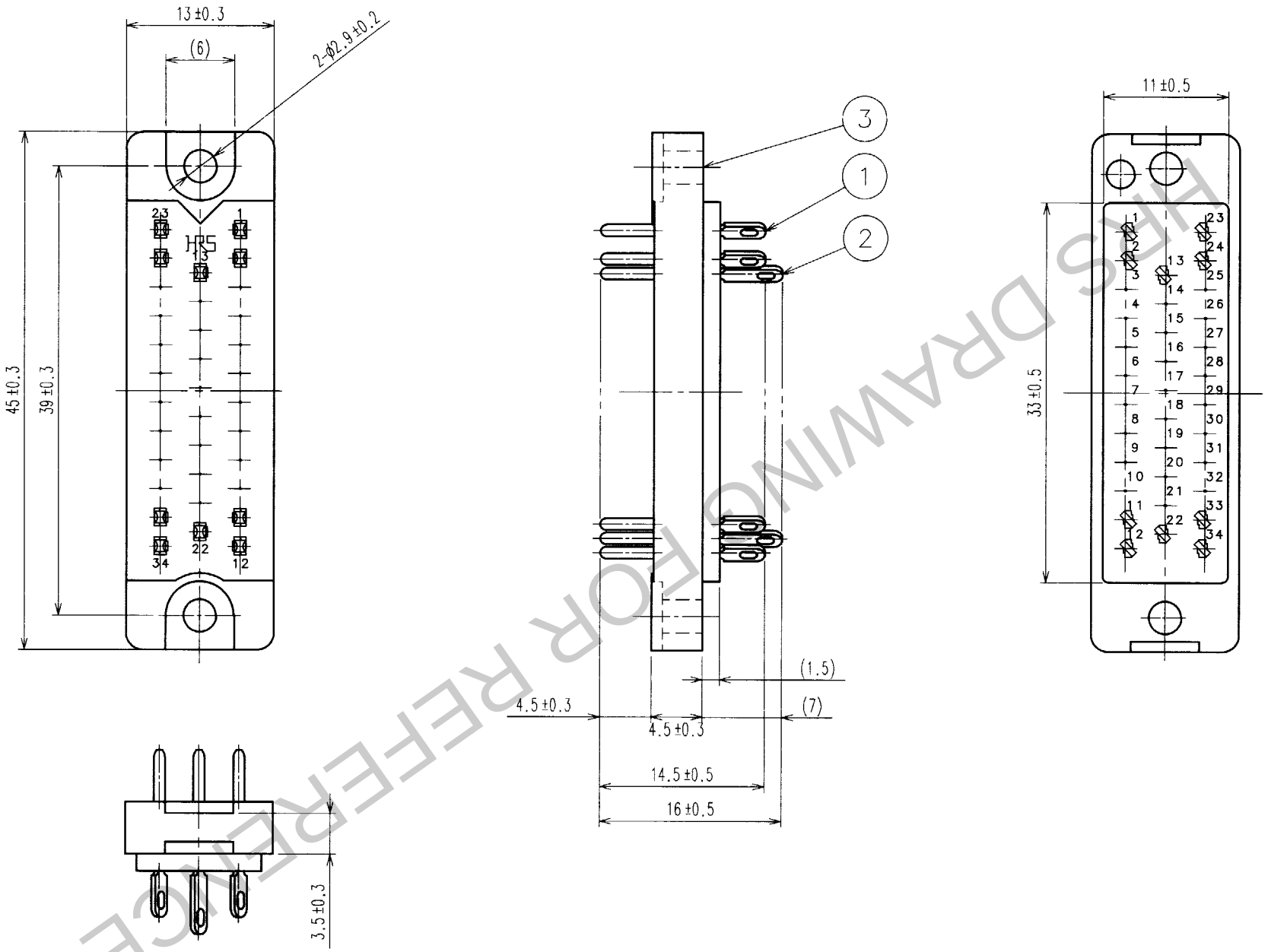

HRS DRAWING FOR REFERENCE

NO.	MATERIAL	FINISH, REMARKS
1	BRASS	SILVER PLATING
2	BRASS	SILVER PLATING
3	DIALLYL PHTHALATE	(BLUE)

CODE NO.(OLD)	DRAWN	DESIGNED	CHECKED	APPROVED	RELEASED
	T. Tanigichi 02·06·20	T. Tanigichi 02·06·20	Y. Enami 02·6·20	S. Matsuzaki 02·6·21	. .

SCALE 2 : 1
UNITS mm

DRAWING NO. EDC3-006394-01

HRS HIROSE ELECTRIC CO., LTD

PART NO. P-1634BA(09)

CODE NO. CL216-0177-1-09

1/1

FORM NO.229

TO
Q1