ITEM NO.	PART NUMBER	DESCRIPTION	QTY.	NOTES
1	TLY-1P	NEMA 1-15P, polarized	1	white overmold
2	30-00243	2C, 18 AWG, UL SPT-1, 300V, 105°C, 5.55 mm, VW-1, PVC, white	1	terminates to stripped and tinned

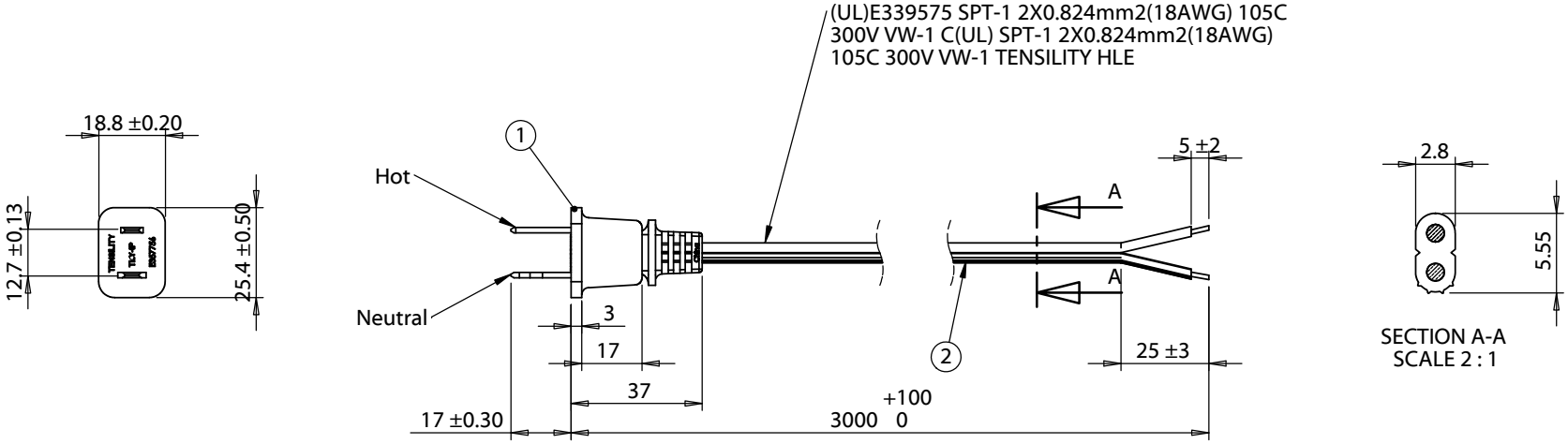

Wiring diagram	
TLY-1P	Wire
Neutral	Grooved
Hot	Smooth

Revision	Date	Description
A	8/27/2014	Initial release

Prepared by:
AG
2014.08.28 10:41:23 -07'00'

Verified by:
JM
2014.09.02 08:08:49 -07'00'

DIMENSIONS ARE IN MILLIMETERS

TOLERANCES:
X: ± 0.5 mm
X.X: ± 0.3 mm
X.XX: ± 0.05 mm

Notes:
Cable rated for 10 A at 125 Vac as is.

RoHS and REACH compliant

Function test: no open, no reversed polarity, no short circuit, no INT

Description:
Ac cord, 3000 mm, U.S, NEMA 1-15P plug, TLY-1P to tinned, 18 AWG, SPT-1 wire, 30-00243, white

TENSILITY
20802 Sockeye Place #130
Bend, OR 97701 USA
tel 541.323.3228 *fax* 541.323.4202
800 877.670.7118 www.tensility.com

SIZE	Part number	
A	**11-00074**	
SCALE: 1:2	WEIGHT:	SHEET 1 OF 1

5 4 3 2 1