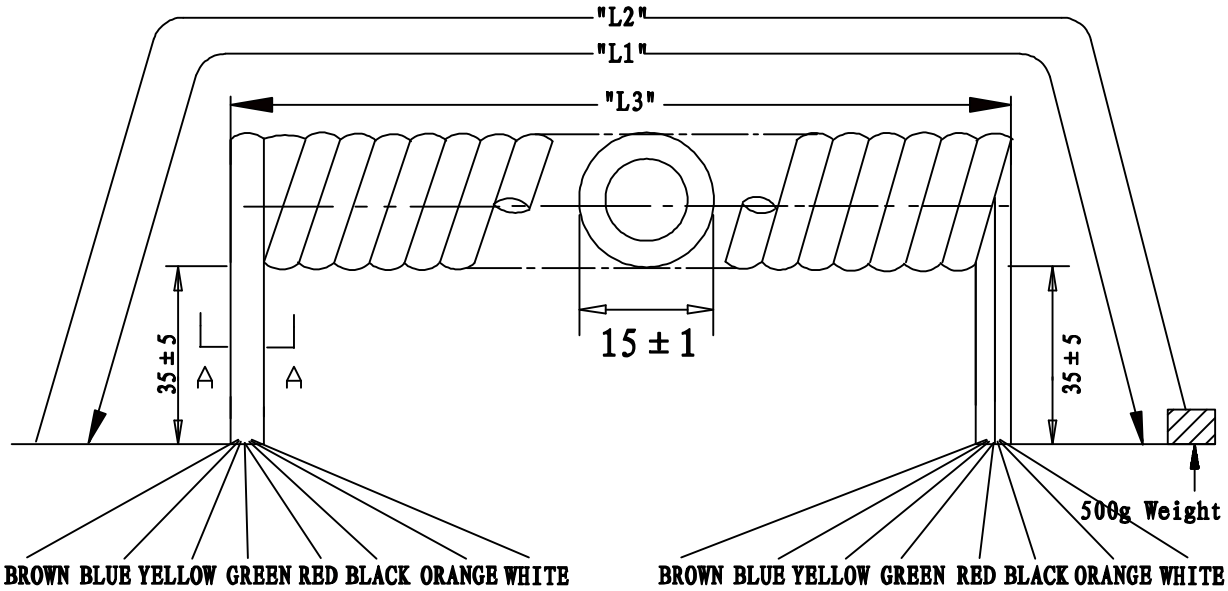

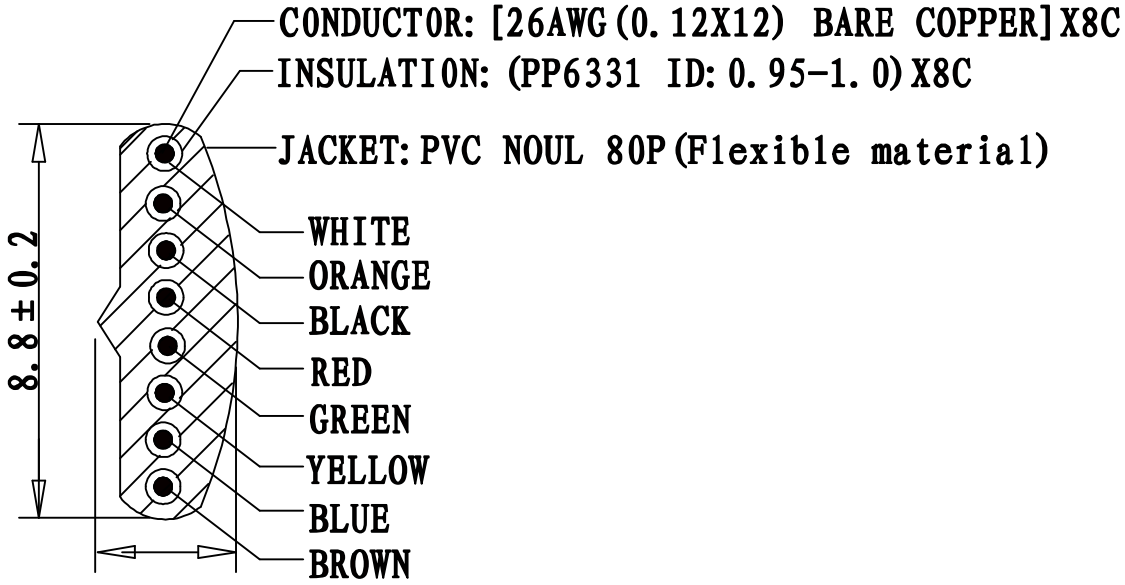

SEC: A=A

PART NO	DRAWING NO	BUYER COLOR	VENDOR COLOR	RETRACTED LENGTH ("L3")	CUSTOMER Accepted ("L2")	CUT LENGTH "L1"
521-26-08-BL-005F	A	Black	BLACK LIGHT	700 ± 50	5.0FT-5.75FT	2900-3000
521-26-08-BL-007F	B	Black	BLACK LIGHT	1000 ± 50	7.0FT-8.05FT	4000-4200
521-26-08-BL-010F	C	Black	BLACK LIGHT	1500 ± 50	10.0FT-11.5FT	5900-6100
521-26-08-BL-014F	D	Black	BLACK LIGHT	1900 ± 50	14.0FT-16.1FT	7600-7800

REVISE	VERSION	BASIS	CONTENTS
12-02-17	A/0	T0210A	NEW DRAWING

CnC Tech, LLC
Industrial Cable and Connector Technology

IDRAWING NO: 671-284		CUSTOMER: L-671
ITEM NO: 8C COILD CORD		UNIT: mm
DATE: 2012-02-17		ISSUE: (A/0)
DRAWN:	QE:	QA:
SALES DEPT:	SALES MANAGER:	